DETAILED DESIGN REVIEW OF SANAM DAM DISTRICT LOWER DIR
DRAWINGS - VOLUME-II
LIST OF DRAWINGS

SERIAL NO.	DRAWING NO.	TITLE
		GENERAL
1	BQB-SDP-GEN-01	LOCATION MAP
2	BQB-SDP-GEN-02	VICINITY MAP
3	BQB-SDP-GEN-03	ACCESSIBILITY MAP
4	BQB-SDP-GEN-04	GENERAL LAYOUT PLAN
		EMBANKMENT DAM
5	BQB-SDP-MD-01	PROJECT LAYOUT PLAN
6	BQB-SDP-MD-02	EMBANKMENT DAM SETTING OUT PLAN
7	BQB-SDP-MD-03	EMBANKMENT DAM LONGITUDINAL SECTION
8	BQB-SDP-MD-04	EMBANKMENT DAM EXCAVATION PLAN
9	BQB-SDP-MD-05	EMBANKMENT EXCAVATION X-SECTION AT RD 0+000
10	BQB-SDP-MD-06	EMBANKMENT EXCAVATION X-SECTION AT RD 0+050
11	BQB-SDP-MD-07	EMBANKMENT EXCAVATION X-SECTION AT RD 0+100
12	BQB-SDP-MD-08	EMBANKMENT EXCAVATION X-SECTION AT RD 0+150
13	BQB-SDP-MD-09	EMBANKMENT EXCAVATION X-SECTION AT RD 0+200
14	BQB-SDP-MD-10	EMBANKMENT EXCAVATION X-SECTION AT RD 0+250
15	BQB-SDP-MD-11	EMBANKMENT EXCAVATION X-SECTION AT RD 0+300
16	BQB-SDP-MD-12	EMBANKMENT EXCAVATION X-SECTION AT RD 0+350
17	BQB-SDP-MD-13	EMBANKMENT EXCAVATION X-SECTION AT RD 0+400
18	BQB-SDP-MD-14	EMBANKMENT EXCAVATION X-SECTION AT RD 0+450
19	BQB-SDP-MD-15	EMBANKMENT EXCAVATION X-SECTION AT RD 0+500
20	BQB-SDP-MD-16	EMBANKMENT EXCAVATION X-SECTION AT RD 0+550
21	BQB-SDP-MD-17	EMBANKMENT EXCAVATION X-SECTION AT RD 0+600
22	BQB-SDP-MD-18	EMBANKMENT EXCAVATION X-SECTION AT RD 0+650
23	BQB-SDP-MD-19	EMBANKMENT EXCAVATION X-SECTION AT RD 0+700
24	BQB-SDP-MD-20	EMBANKMENT EXCAVATION X-SECTION AT RD 0+750
25	BQB-SDP-MD-21	EMBANKMENT EXCAVATION X-SECTION AT RD 0+800
26	BQB-SDP-MD-22	EMBANKMENT EXCAVATION X-SECTION AT RD 0+850
27	BQB-SDP-MD-23	EMBANKMENT EXCAVATION X-SECTION AT RD 0+870
28	BQB-SDP-MD-24	EMBANKMENT DAM GROUTING NOTES
29	BQB-SDP-MD-25	EMBANKMENT DAM & SPILLWAY GROUTING
30	BQB-SDP-MD-26	EMBANKMENT DAM PLAN
31	BQB-SDP-MD-27	MAIN EMBANKMENT X-SECTION AT RD 0+000
32	BQB-SDP-MD-28	MAIN EMBANKMENT X-SECTION AT RD 0+050
33	BQB-SDP-MD-29	MAIN EMBANKMENT X-SECTION AT RD 0+100
34	BQB-SDP-MD-30	MAIN EMBANKMENT X-SECTION AT RD 0+150
35	BQB-SDP-MD-31	MAIN EMBANKMENT X-SECTION AT RD 0+200
36	BQB-SDP-MD-32	MAIN EMBANKMENT X-SECTION AT RD 0+250
37	BQB-SDP-MD-33	MAIN EMBANKMENT X-SECTION AT RD 0+300
38	BQB-SDP-MD-34	MAIN EMBANKMENT X-SECTION AT RD 0+350
39	BQB-SDP-MD-35	MAIN EMBANKMENT X-SECTION AT RD 0+400
40	BQB-SDP-MD-36	MAIN EMBANKMENT X-SECTION AT RD 0+450
41	BQB-SDP-MD-37	MAIN EMBANKMENT X-SECTION AT RD 0+500
42	BQB-SDP-MD-38	MAIN EMBANKMENT X-SECTION AT RD 0+550
43	BQB-SDP-MD-39	MAIN EMBANKMENT X-SECTION AT RD 0+600
44	BQB-SDP-MD-40	MAIN EMBANKMENT X-SECTION AT RD 0+650
45	BQB-SDP-MD-41	MAIN EMBANKMENT X-SECTION AT RD 0+700
46	BQB-SDP-MD-42	MAIN EMBANKMENT X-SECTION AT RD 0+750
47	BQB-SDP-MD-43	MAIN EMBANKMENT X-SECTION AT RD 0+800
48	BQB-SDP-MD-44	MAIN EMBANKMENT X-SECTION AT RD 0+850
49	BQB-SDP-MD-45	MAIN EMBANKMENT X-SECTION AT RD 0+870
50	BQB-SDP-MD-46	EMBANKMENT DAM WRAPAROUND PLAN
51	BQB-SDP-MD-47	MAIN EMBANKMENT WRAPAROUND SECTION-A
52	BQB-SDP-MD-48	MAIN EMBANKMENT WRAPAROUND SECTION-B
53	BQB-SDP-MD-49	MAIN EMBANKMENT WRAPAROUND SECTION-C
54	BQB-SDP-MD-50	MAIN EMBANKMENT WRAPAROUND SECTION-D
55	BQB-SDP-MD-51	MAIN EMBANKMENT WRAPAROUND SECTION-E
56	BQB-SDP-MD-52	MAIN EMBANKMENT WRAPAROUND SECTION-F
57	BQB-SDP-MD-53	SPECIFICATION GRADING LIMITS FOR FILL MATERIAL
58	BQB-SDP-MD-54	MAIN EMBANKMENT INSTRUMENTATION
59	BQB-SDP-MD-55	RIGHT ABUTMENT ACCESS ROAD PLAN & PROFILE RD 0+000 TO 1+000
60	BQB-SDP-MD-56	RIGHT ABUTMENT ACCESS ROAD PLAN & PROFILE RD 1+000 TO 1+900
61	BQB-SDP-MD-57	LEFT ABUTMENT ACCESS ROAD PLAN & PROFILE RD 0+000 TO 0+750
62	BQB-SDP-MD-58	LEFT ABUTMENT ACCESS ROAD PLAN & PROFILE RD 0+750 TO 1+471

DETAILED DESIGN REVIEW OF SANAM DAM DISTRICT LOWER DIR
DRAWINGS - VOLUME-II
LIST OF DRAWINGS

SERIAL NO.	DRAWING NO.	TITLE
63	BQB-SDP-MD-59	RIGHT ABUTMENT ACCESS ROAD TYPICAL SECTIONS
64	BQB-SDP-MD-60	LEFT ABUTMENT ACCESS ROAD TYPICAL SECTIONS
		SPILLWAY
65	BQB-SDP-SP-01	SPILLWAY GENERAL LAYOUT PLAN
66	BQB-SDP-SP-02	SPILLWAY STRUCTURE PLAN
67	BQB-SDP-SP-03	SPILLWAY CROSS SECTION AT CENTERLINE
68	BQB-SDP-SP-04	SPILLWAY CROSS SECTION RD 0+870
69	BQB-SDP-SP-05	SPILLWAY CROSS SECTIONS RD 0+900 & 0+925
70	BQB-SDP-SP-06	SPILLWAY CROSS SECTIONS RD 0+950 & 0+975
71	BQB-SDP-SP-07	SPILLWAY CROSS SECTIONS RD 1+000 &1+025
72	BQB-SDP-SP-08	SPILLWAY CROSS SECTIONS RD 1+050 &1+075
73	BQB-SDP-SP-09	SPILLWAY CROSS SECTIONS RD 1+000 &1+125
74	BQB-SDP-SP-10	SPILLWAY CROSS SECTION X-SEC-1
75	BQB-SDP-SP-11	SPILLWAY CROSS SECTION X-SEC-2
76	BQB-SDP-SP-12	SPILLWAY CROSS SECTION X-SEC-3
77	BQB-SDP-SP-13	SPILLWAY CROSS SECTION X-SEC-4
78	BQB-SDP-SP-14	SPILLWAY CROSS SECTION X-SEC-5
79	BQB-SDP-SP-15	SPILLWAY CROSS SECTION X-SEC-6
80	BQB-SDP-SP-16	GENERAL NOTES FOR STRUCTURES
81	BQB-SDP-SP-17	CONCRETE OUTLINE SECTIONS
82	BQB-SDP-SP-18	CONCRETE OUTLINE SECTIONS
83	BQB-SDP-SP-19	REINFORCEMENT SECTIONS
84	BQB-SDP-SP-20	REINFORCEMENT SECTIONS
85	BQB-SDP-SP-21	SPILLWAY & STILLING BASIN REINFORCEMENT
86	BQB-SDP-SP-22	PIER & GALLERY REINFORCEMENT
87	BQB-SDP-SP-23	JOINT DETAILS

SERIAL NO.	DRAWING NO.	TITLE
		INTAKE & OUTLET STRUCTURE
88	BQB-SDP-INT-01	INTAKE & OUTLET STRUCTURE LAYOUT PLAN
89	BQB-SDP-INT-02	INTAKE & OUTLET STRUCTURE L-SECTION AT RD 0+300
90	BQB-SDP-INT-03	INTAKE STRUCTURE PLAN & SECTION
91	BQB-SDP-INT-04	OUTLET STRUCTURE PLAN & SECTION
92	BQB-SDP-INT-05	INTAKE STRUCTURE,CONDUIT REINFORCEMENT
93	BQB-SDP-INT-06	OUTLET STRUCTURE REINFORCEMENT
		COMMAND AREA
94	BQB-SDP-M-CA-01	COMMAND AREA CHAKBANDI LAYOUT PLAN
95	BQB-SDP-IC-PP-01	IRRIGATION CHANNEL PLAN & PROFILE FROM RD 0+000 TO 3+500
96	BQB-SDP-IC-PP-02	IRRIGATION CHANNEL PLAN & PROFILE FROM RD 3+500 TO 7+000
97	BQB-SDP-IC-PP-03	IRRIGATION CHANNEL PLAN & PROFILE FROM RD 7+000 TO 10+500
98	BQB-SDP-IC-PP-04	IRRIGATION CHANNEL PLAN & PROFILE FROM RD 10+500 TO 14+000
99	BQB-SDP-IC-PP-05	IRRIGATION CHANNEL PLAN & PROFILE FROM RD 14+000 TO 17+500
100	BQB-SDP-IC-PP-06	IRRIGATION CHANNEL PLAN & PROFILE FROM RD 17+500 TO 21+000
101	BQB-SDP-IC-PP-07	IRRIGATION CHANNEL PLAN & PROFILE FROM RD 21+000 TO 24+500
102	BQB-SDP-IC-PP-08	IRRIGATION CHANNEL PLAN & PROFILE FROM RD 24+500 TO 25+719
103	BQB-SDP-ID-PP-01	IRRIGATION DISTRIBUTARY PLAN & PROFILE FROM RD 0+000 TO 3+500
104	BQB-SDP-ID-PP-02	IRRIGATION DISTRIBUTARY PLAN & PROFILE FROM RD 3+500 TO 7+000
105	BQB-SDP-ID-PP-03	IRRIGATION DISTRIBUTARY PLAN & PROFILE FROM RD 7+000 TO 10+500
106	BQB-SDP-ID-PP-04	IRRIGATION DISTRIBUTARY PLAN & PROFILE FROM RD 10+500 TO 14+000
107	BQB-SDP-ID-PP-05	IRRIGATION DISTRIBUTARY PLAN & PROFILE FROM RD 14+000 TO 17+436

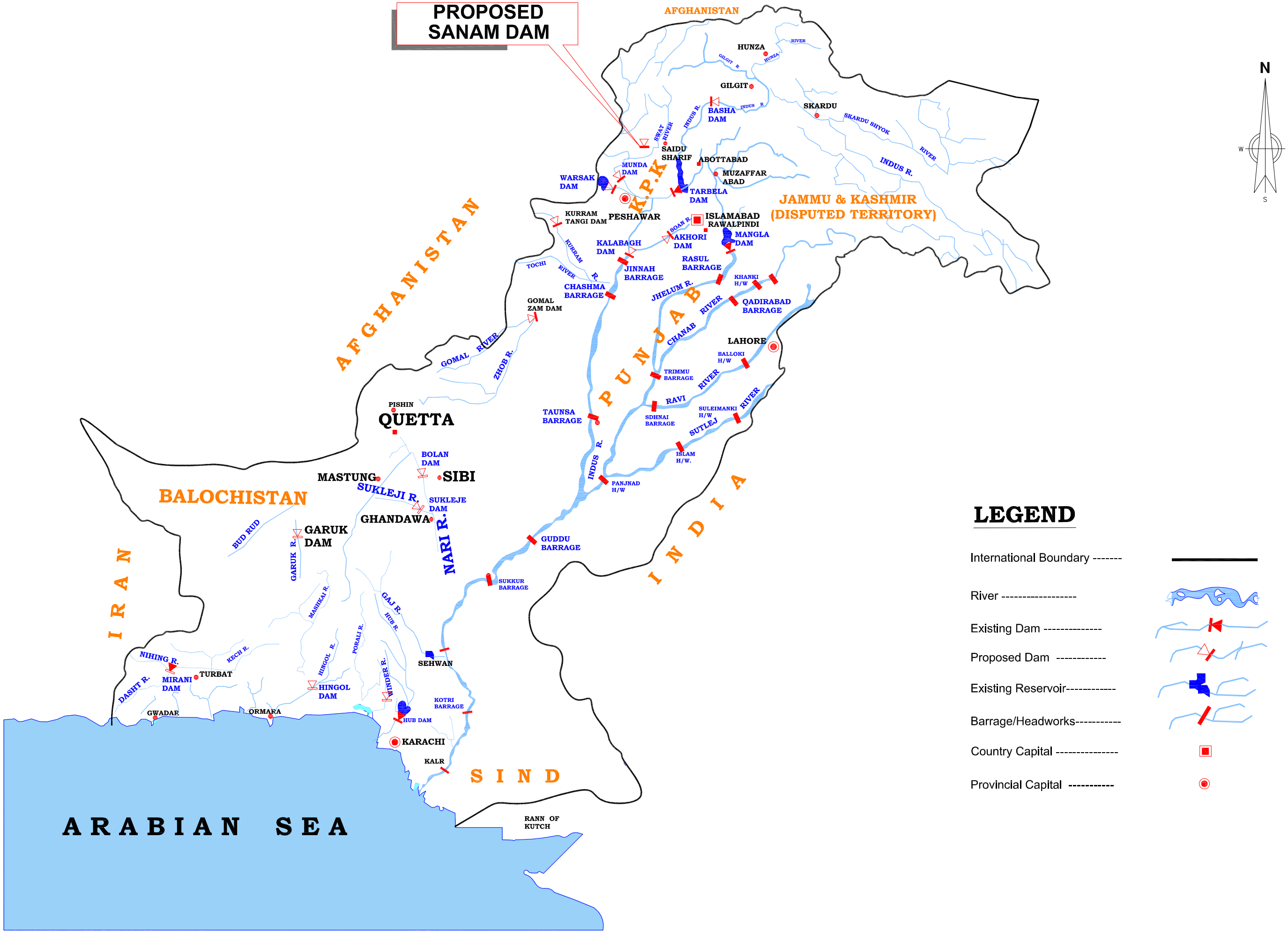

SMALL DAMS ORGANIZATION
GOVERNMENT OF KHYBER PAKHTUNKHWA

BARQAAB CONSULTING SERVICES
(PVT)LIMITED LAHORE

SANAM DAM PROJECT
LOWER DIR

REV.	DATE	DESCRIPTION		
			DRAWN	IMTIAZ
			CHECKED	TANVIR ABBAS
			SUBMITTED	TANVIR ABBAS
			APPROVED	M.T.A

PROJECT LOCATION PLAN

DATE: January, 2018

DRAWING NO. **BQB-SDP-GD-01**

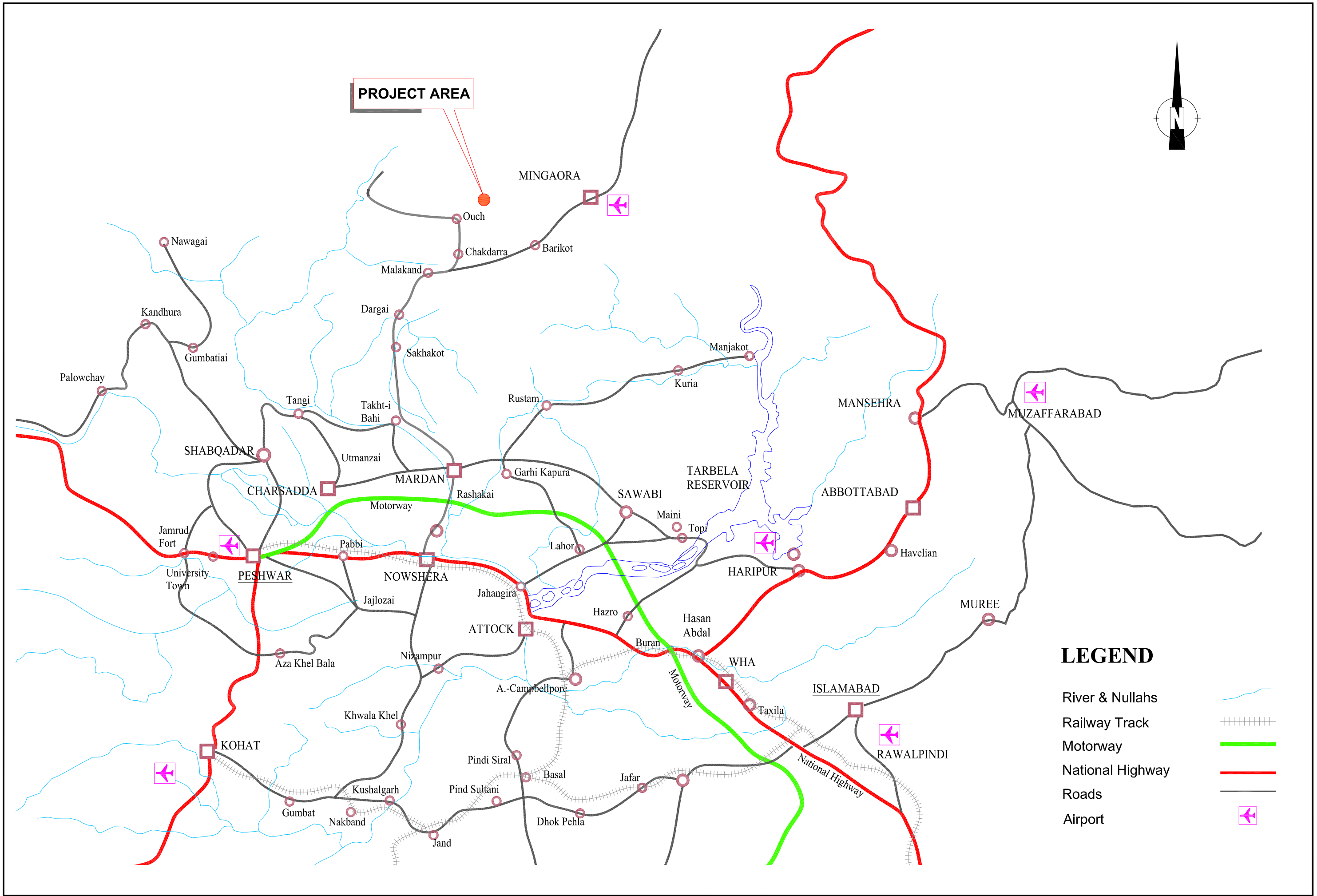

SMALL DAMS ORGANIZATION
GOVERNMENT OF KHYBER PAKHTUNKHWA

BARQAAB CONSULTING SERVICES
(PVT)LIMITED LAHORE

SANAM DAM PROJECT
LOWER DIR

REV.	DATE	DESCRIPTION

DRAWN	IMTIAZ
CHECKED	TANVIR ABBAS
SUBMITTED	TANVIR ABBAS
APPROVED	M.T.A

PROJECT LOCATION PLAN

DATE: January, 2018

DRAWING NO. **BQB-SDP-GD-02**

BM LIST & POINTS OF SANAM DAM

1	X_COORD	Y_COORD	ELEVATION	LAYER
2	231366.91	3849698.16	3247.22	BM1
3	231983.86	3849351.72	3303.03	BM10
4	230832.65	3849647.26	3269.05	BM11
5	235722.22	3852765.31	3358.39	BM12
6	235536.24	3852612.41	3359.46	BM13
7	230867.78	3849698.38	3269.55	BM14
8	230943.8	3850373.16	3305.73	BM2
9	230740.33	3850524.79	3325.92	BM3
10	232334.52	3851362.33	3331.47	BM4
11	232488.41	3851195.1	3339.48	BM5
12	231560.57	3850148.4	3234.96	BM6
13	231594.45	3850009.4	3230.83	BM7
14	231937.19	3849663.25	3305.9	BM8
15	232132.33	3849297.9	3303.63	BM9
16	231855.4	3849534.62	3313.94	PILLAR 1
17	230659.47	3850435.56	3328.94	PILLAR 2
18	227853.86	3847385.24	3170.56	W_6
19	227530.97	3846617.07	3136.49	W_7
20	227715.69	3846063.91	3112.07	W_8
21	226354.53	3844811.68	3071.18	W_9
22	225582.45	3843989.48	3047.21	W_10
23	225303.46	3843122.53	3026.81	W_11
24	225391.68	3843349.91	3031.19	W_BM_12
25	224432.12	3841814.28	2986.39	W_13
26	223473.47	3840702.09	2952.09	W_14
27	222982.93	3839119.67	2918.67	W_15
28	222809.86	3837637.13	2888.65	W_16
29	222443.58	3836087.92	2851.54	W_17
30	221844.88	3835155.64	2825.25	W_18
31	221598.46	3835539.83	2833.56	PILLAR_4
32	221911.95	3835205.02	2834.88	PILLAR_3
33	221758.15	3835008.18	2822.81	BM_17
34	221499.26	3835013.47	2821.45	BM_18
35	213192.4892	3834633.42	2669.31	BM24
36	213255.91	3834803.7	2672.04	BM23
37	222868.29	3842589.65	3026.02	BM16
38	223154.97	3842877.17	3026.7	BM15
39	229217.94	3848459.4	3218.2	T_4
40	228709.05	3847839.02	3188.16	T_5

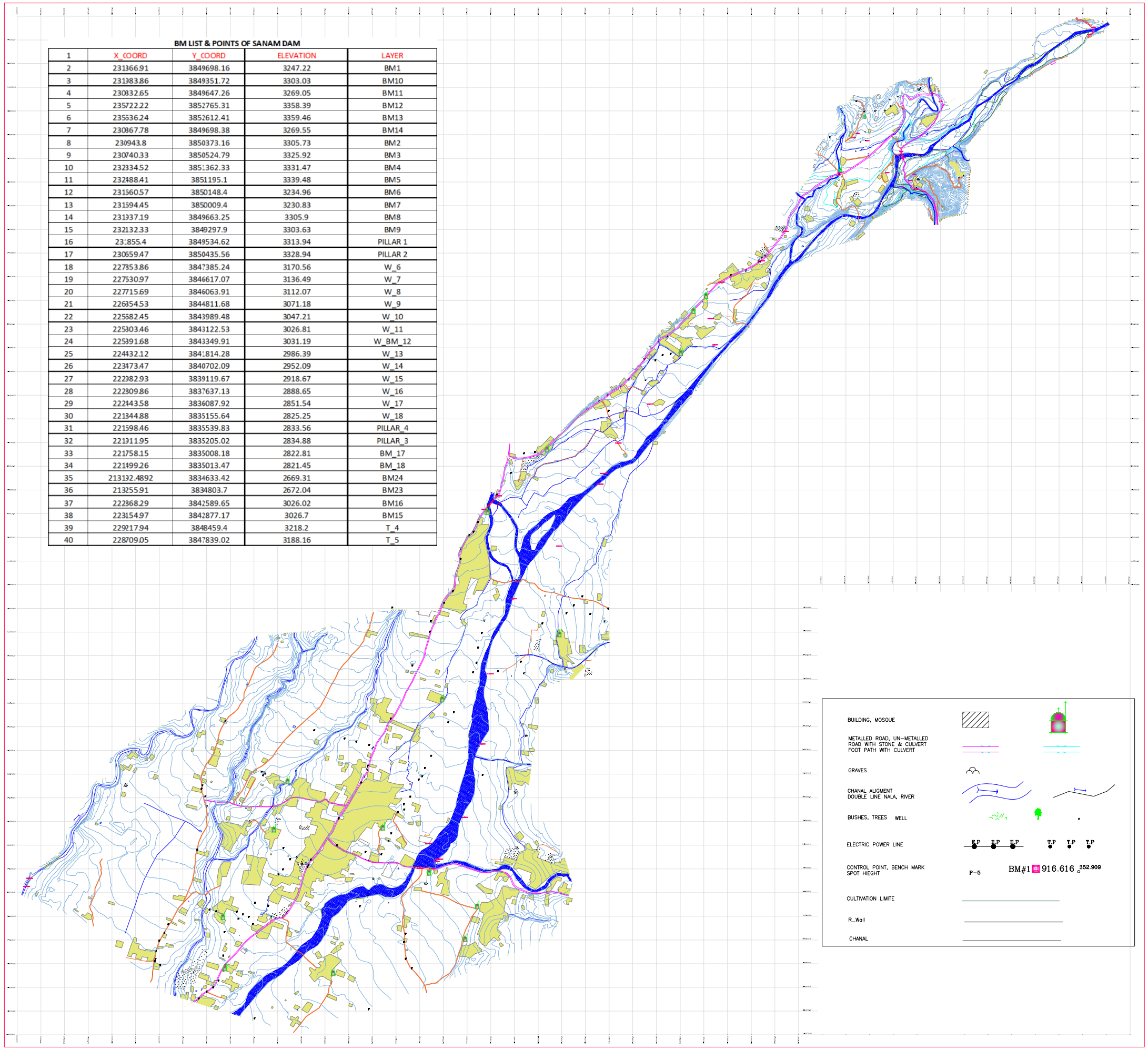

SMALL DAMS ORGANIZATION
GOVERNMENT OF KHYBER PAKHTUNKHWA

BARQAAB CONSULTING SERVICES
(PVT)LIMITED LAHORE

SANAM DAM PROJECT
LOWER DIR

REV.	DATE	DESCRIPTION

DRAWN	IMTIAZ
CHECKED	TANVIR ABBAS
SUBMITTED	TANVIR ABBAS
APPROVED	M.T.A

TOPOGRAPHIC SURVEY

DATE: January, 2018

DRAWING NO. **BQB-SDP-GD-03**

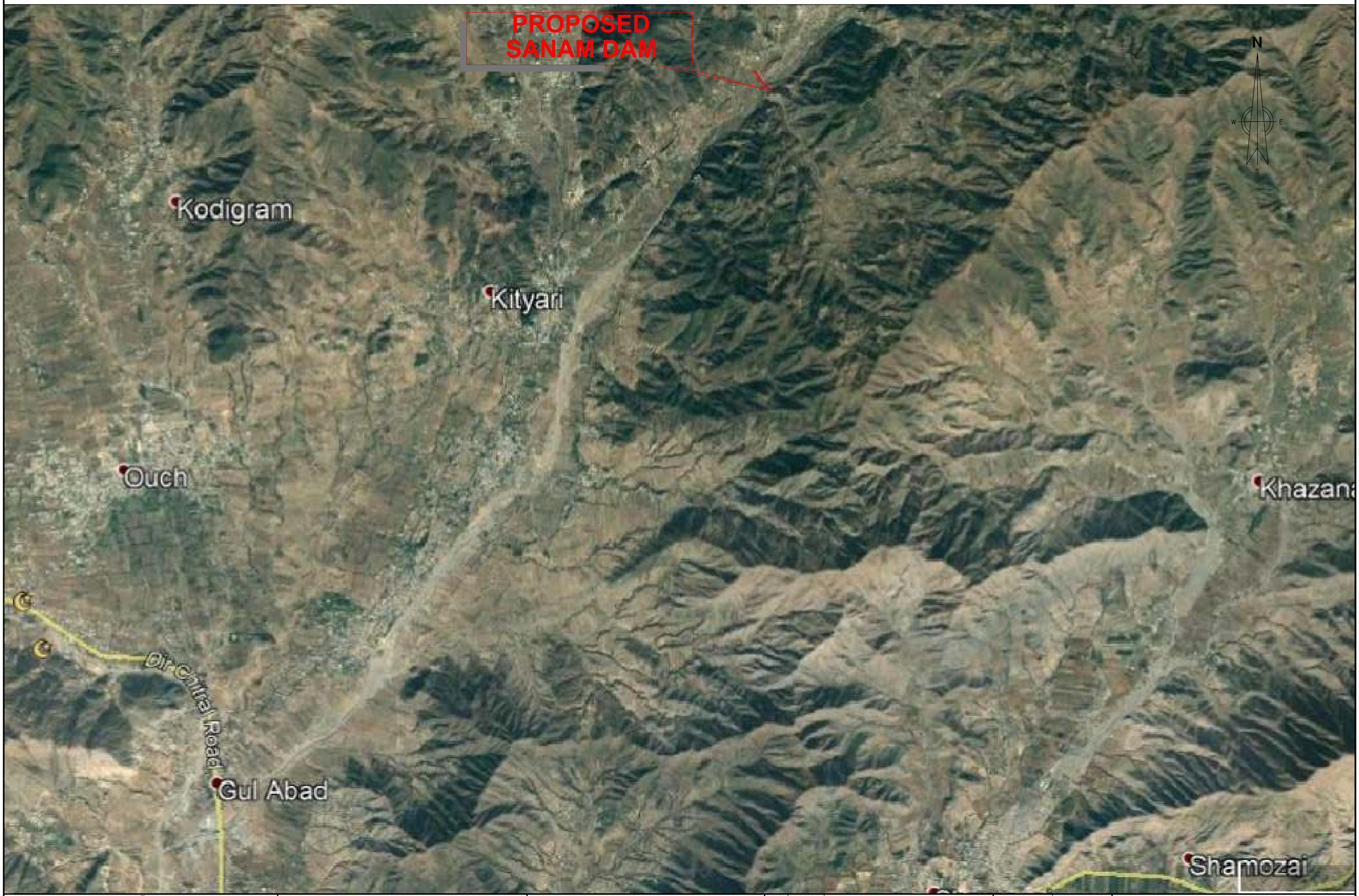

SMALL DAMS ORGANIZATION
GOVERNMENT OF KHYBER PAKHTUNKHWA

BARQAAB CONSULTING SERVICES
(PVT)LIMITED LAHORE

SANAM DAM PROJECT
LOWER DIR

REV.	DATE	DESCRIPTION		
			DRAWN	IMTIAZ
			CHECKED	TANVIR ABBAS
			SUBMITTED	TANVIR ABBAS
			APPROVED	M.T.A

SATELLITE IMAGERY

DATE: January, 2018

DRAWING NO. **BQB-SDP-GD-04**

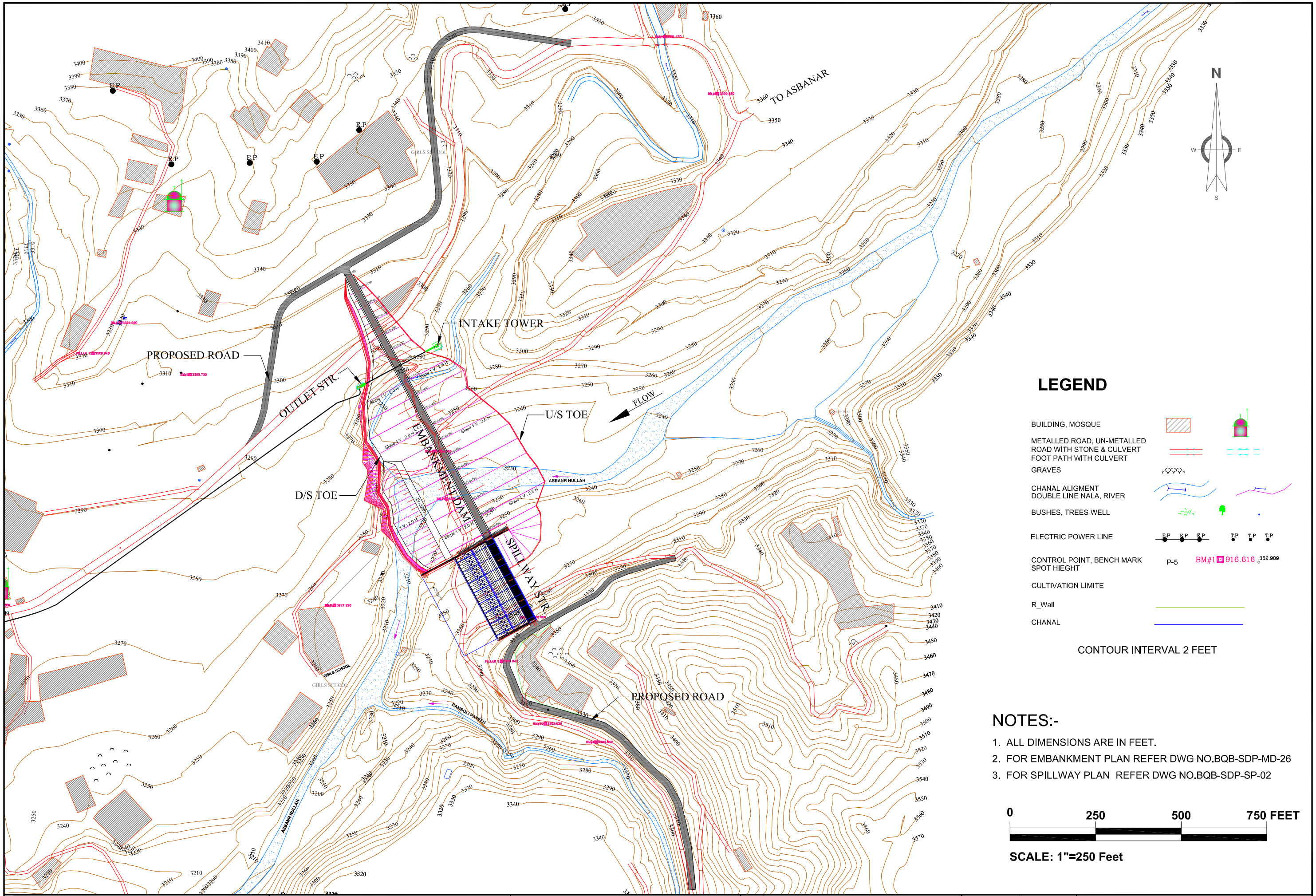

SMALL DAMS ORGANIZATION
GOVERNMENT OF KHYBER PAKHTUNKHWA

BARQAAB CONSULTING SERVICES
(PVT)LIMITED LAHORE

SANAM DAM PROJECT
LOWER DIR

REV.	DATE	DESCRIPTION

DRAWN	IMTIAZ
CHECKED	TANVIR ABBAS
SUBMITTED	TANVIR ABBAS
APPROVED	M.T.A

PROJECT LAYOUT PLAN

DATE: April, 2018

DRAWING NO. **BQB-SDP-MD-01**

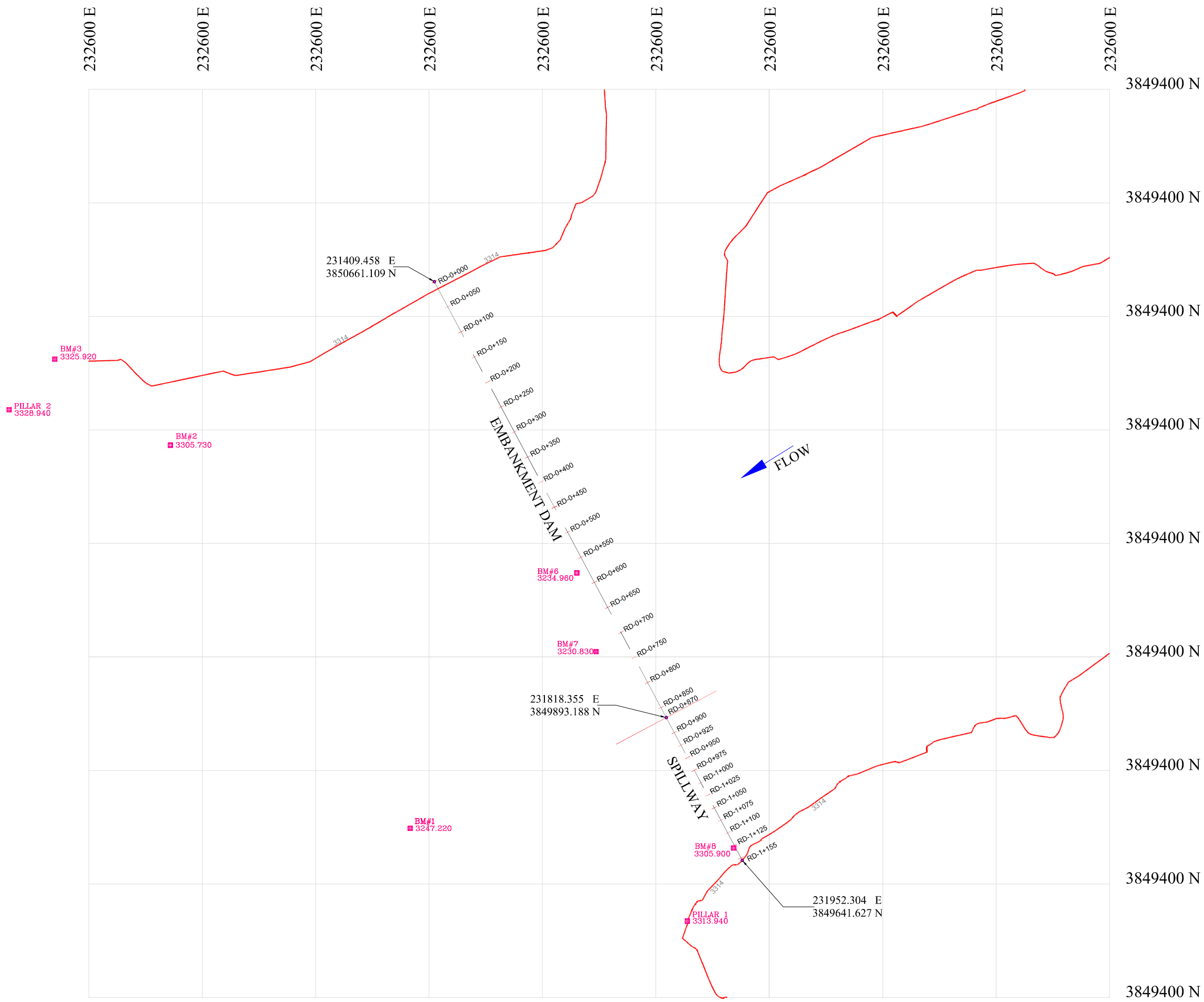

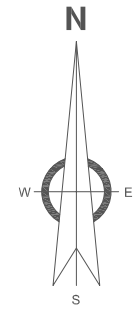

DESCRIPTION	COORDINATES
Dam Right Abutment	231409.458 E 3850661.109 N
Dam Left Abutment	231818.355 E 3849893.188 N
Spillway Right Abutment	231818.355 E 3849893.188 N
Spillway Left Abutment	231952.304 E 3849641.627 N
Pillar - 1	231855.400 E 3849534.620 N
Pillar - 2	230659.470 E 3850435.560 N
BM - 1	231366.910 E 3849698.160 N
BM - 2	230943.800 E 3850373.160 N
BM - 3	230740.220 E 3850524.820 N
BM - 6	231660.570 E 3850148.400 N
BM - 7	231694.450 E 3850009.410 N
BM - 8	231937.190 E 3849663.250 N

NOTES:-

1. ALL DIMENSIONS ARE IN FEET.
2. FOR PLAN REFER DWG NO. BQB-SDP-MD-04 & 26
3. FOR X-SECTIONS REFER DWG NO. BQB-SDP-MD-05 TO 23 & 27 TO 45

SMALL DAMS ORGANIZATION
GOVERNMENT OF KHYBER PAKHTUNKHWA

BARQAAB CONSULTING SERVICES
(PVT)LIMITED LAHORE

SANAM DAM PROJECT
LOWER DIR

REV.	DATE	DESCRIPTION

DRAWN	IMTIAZ
CHECKED	TANVIR ABBAS
SUBMITTED	TANVIR ABBAS
APPROVED	M.T.A

EMBANKMENT DAM SETTING OUT PLAN

DATE: April, 2018

DRAWING NO. **BQB-SDP-MD-02**

LEGEND

Natural Surface Level (N.S.L)

Accepted Foundation Level (A.F.L)

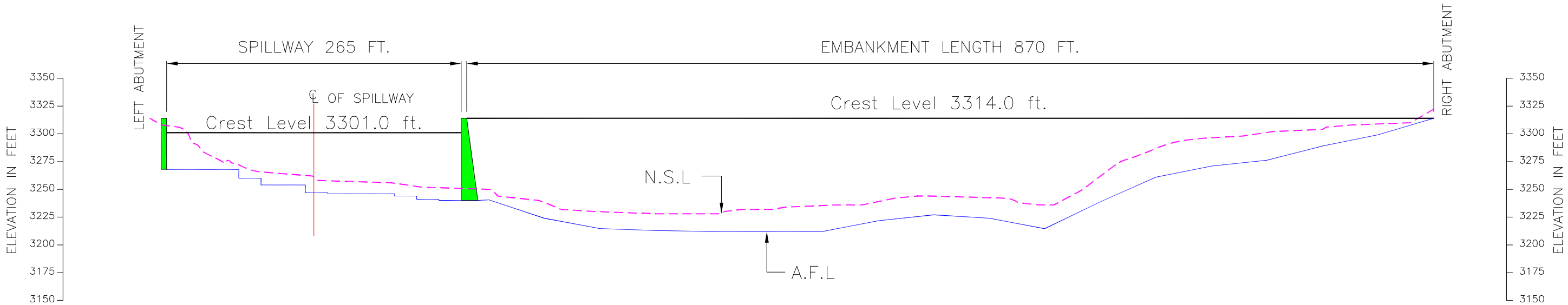

| | | |

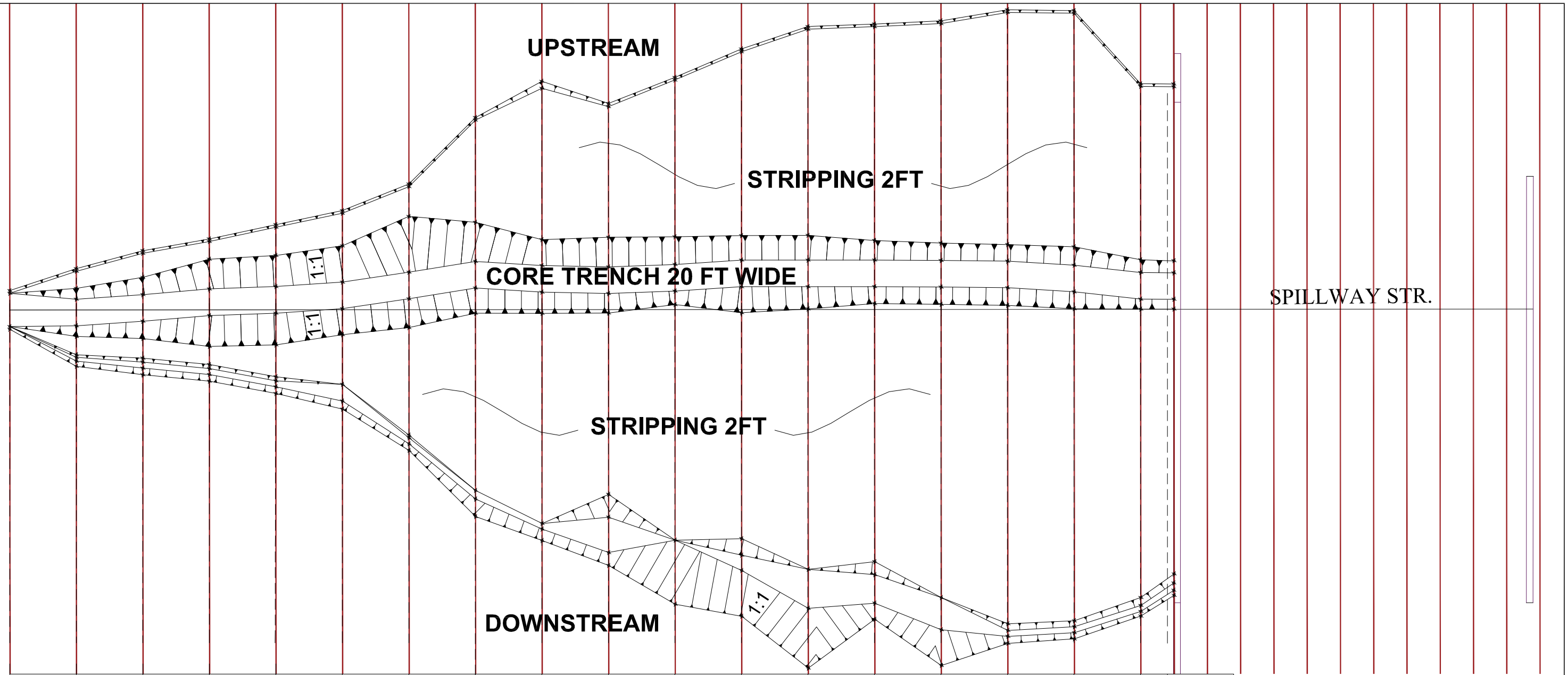

A.F.L FROM DOWNSTREAM TO UPSTREAM										
RDs										
000	3316.00	3314.00	3314.00	3316.00	3307.20	3307.20	3299.23	3307.33	3307.38	3309.39
050	3309.12	3305.23	3305.23	3299.00	3302.00	3302.00	3299.23	3302.00	3302.00	3304.00
100	3304.00	3299.00	3299.00	3302.00	3302.00	3289.00	3289.00	3298.67	3298.67	3300.44
150	3302.00	3296.57	3296.57	3299.57	3299.57	3276.31	3276.31	3276.67	3276.67	3298.47
200	3297.11	3291.93	3291.93	3295.02	3294.84	3271.00	3271.00	3294.35	3294.35	3294.19
250	3294.12	3288.08	3288.08	3280.54	3261.00	3261.00	3288.22	3290.00	3290.00	3292.00
300	3276.00	3271.00	3271.00	3273.00	3260.40	3238.76	3238.76	3238.67	3280.67	3282.00
350	3264.43	3251.22	3251.22	3233.54	3214.60	3214.60	3214.00	3244.00	3262.00	3264.00
400	3248.53	3239.90	3239.90	3239.90	3223.97	3223.97	3223.42	3252.45	3252.68	3257.68
450	3233.72	3224.00	3224.00	3230.05	3241.73	3227.08	3227.08	3248.68	3248.68	3258.00
500	3272.28	3224.17	3231.88	3221.75	3221.75	3242.55	3250.00	3250.00		
550	3268.71	3234.31	3234.31	3222.00	3231.53	3212.00	3212.00	3212.00	3241.52	3243.60
600	3265.06	3220.09	3220.09	3228.72	3212.00	3212.00	3230.50	3234.77	3236.83	
650	3234.10	3221.99	3221.99	3214.00	3224.72	3212.00	3212.00	3226.68	3234.00	3236.00
700	3238.84	3212.00	3212.00	3226.00	3213.00	3213.00	3226.00	3233.10	3235.19	
750	3212.24	3207.00	3207.00	3212.00	3228.00	3214.69	3214.69	3227.15	3229.76	3231.82
800	3213.33	3208.67	3208.67	3213.10	3236.64	3223.95	3223.95	3237.77	3230.00	3232.00
850	3219.34	3215.86	3215.86	3221.84	3248.04	3240.51	3240.51	3240.51	3252.00	3254.00
870	3227.72	3223.91	3223.91	3230.69	3248.69	3241.15	3241.15	3250.22	3252.13	3254.19

NOTES:-

1. ALL DIMENSIONS ARE IN FEET.
2. FOR X-SECTIONS REFER DWG NO. BQB-SDP-MD-05 TO 23

SMALL DAMS ORGANIZATION
GOVERNMENT OF KHYBER PAKHTUNKHWA

BARQAAB CONSULTING SERVICES
(PVT)LIMITED LAHORE

SANAM DAM PROJECT
LOWER DIR

REV.	DATE	DESCRIPTION

DRAWN	IMTIAZ
CHECKED	TANVIR ABBAS
SUBMITTED	TANVIR ABBAS
APPROVED	M.T.A

EMBANKMENT DAM EXCAVATION PLAN

DATE: April, 2018

DRAWING NO. **BQB-SDP-MD-04**

U/S

D/S

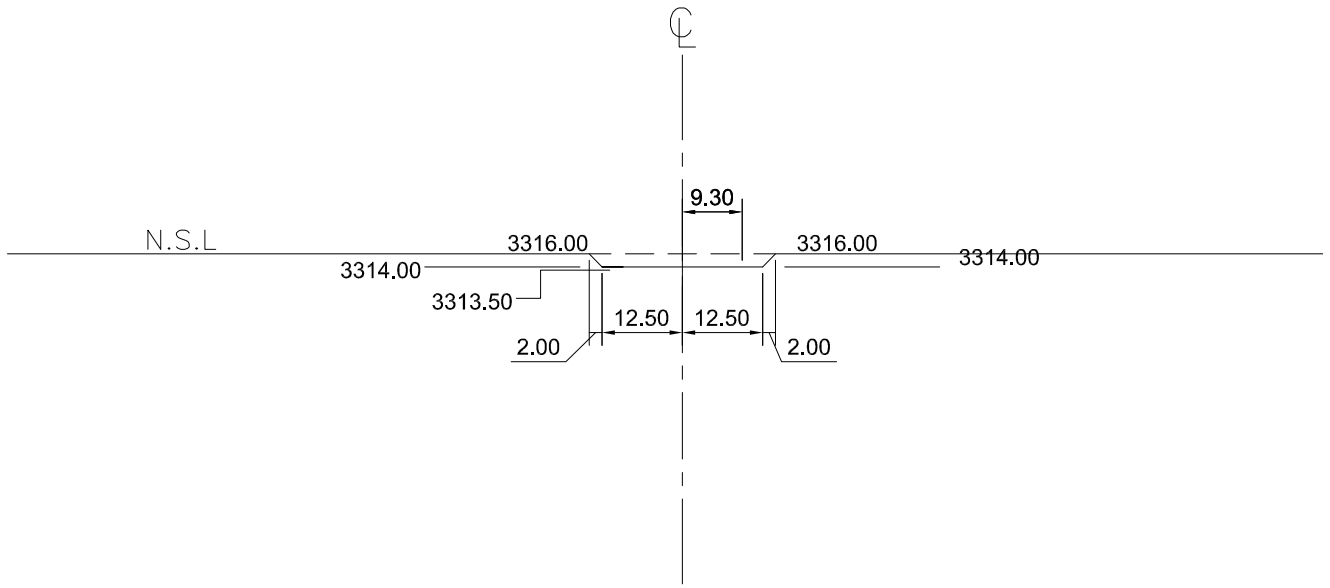

NOTES:-

1. **ALL DIMENSIONS ARE IN FEET**
2. **FOR LOCATION REF. DWG. NO. BQB-SDP-MD-04**
3. **DAM BODY SHOULD BE PLACED ON SOUND ROCK OR AS DIRECTED BY ENGINEER AT SITE**

SCALE: 1"=30 Feet

SMALL DAMS ORGANIZATION
GOVERNMENT OF KHYBER PAKHTUNKHWA

BARQAAB CONSULTING SERVICES
(PVT)LIMITED LAHORE

SANAM DAM PROJECT
LOWER DIR

REV.	DATE	DESCRIPTION

DRAWN	IMTIAZ
CHECKED	TANVIR ABBAS
SUBMITTED	TANVIR ABBAS
APPROVED	M.T.A

EMBANKMENT EXCAVATION X-SECTION AT RD 0+000

DATE: April, 2018

DRAWING NO. **BQB-SDP-MD-05**

U/S

D/S

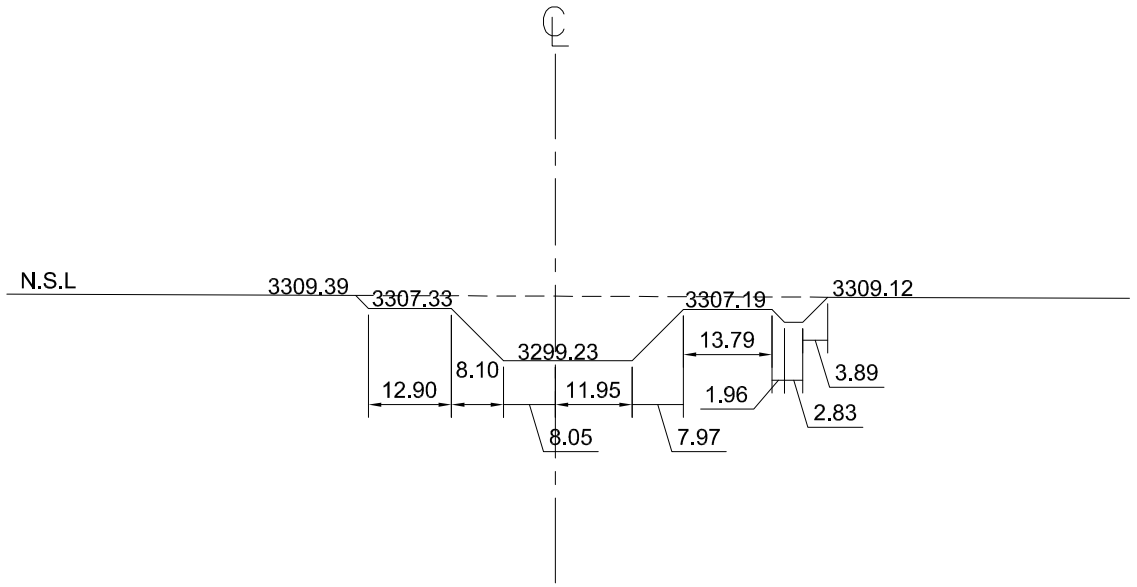

NOTES:-

1. **ALL DIMENSIONS ARE IN FEET**
2. **FOR LOCATION REF. DWG. NO. BQB-SDP-MD-04**
3. **DAM BODY SHOULD BE PLACED ON SOUND ROCK OR AS DIRECTED BY ENGINEER AT SITE**

SCALE: 1"=30 Feet

SMALL DAMS ORGANIZATION GOVERNMENT OF KHYBER PAKHTUNKHWA	BARQAAB CONSULTING SERVICES (PVT)LIMITED LAHORE	SANAM DAM PROJECT LOWER DIR			DRAWN	IMTIAZ
					CHECKED	TANVIR ABBAS
					SUBMITTED	TANVIR ABBAS
			REV.	DATE	APPROVED	M.T.A

EMBANKMENT EXCAVATION X-SECTION AT RD 0+050

DATE: April, 2018

DRAWING NO. **BQB-SDP-MD-06**

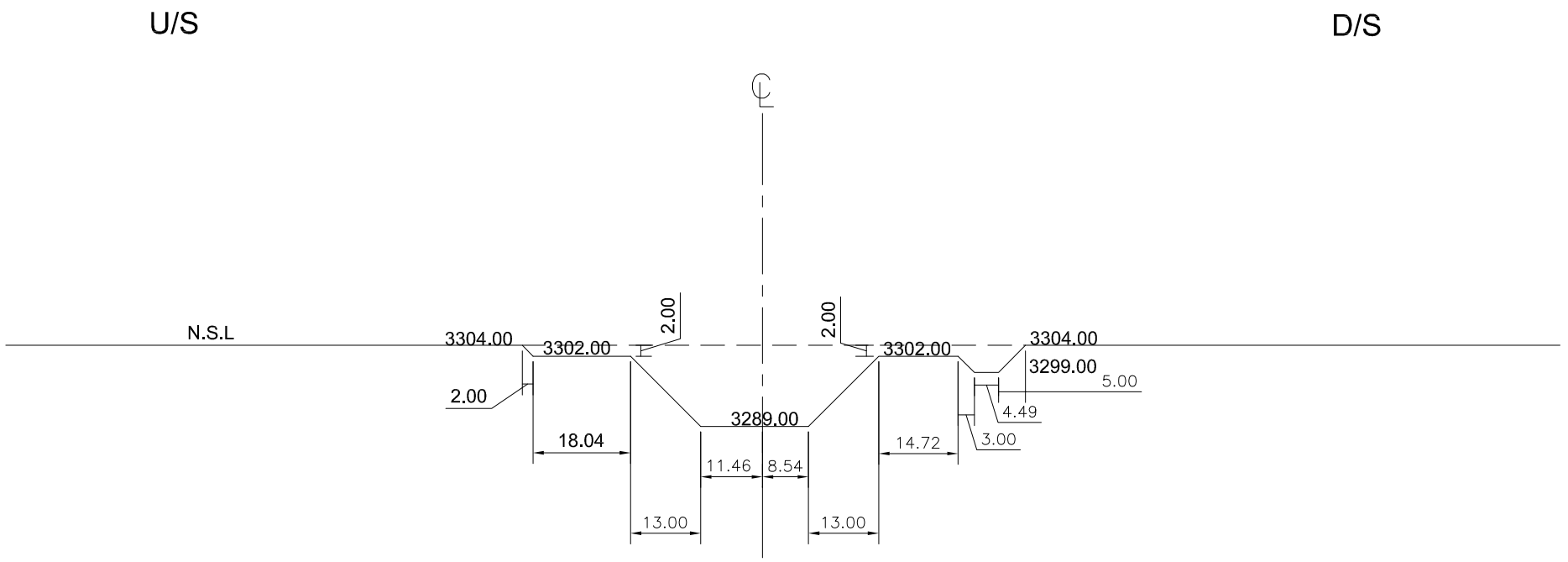

NOTES:-

1. **ALL DIMENSIONS ARE IN FEET**
2. **FOR LOCATION REF. DWG. NO. BQB-SDP-MD-04**
3. **DAM BODY SHOULD BE PLACED ON SOUND ROCK OR AS DIRECTED BY ENGINEER AT SITE**

0 30 60 90 FEET

SCALE: 1"=30 Feet

SMALL DAMS ORGANIZATION GOVERNMENT OF KHYBER PAKHTUNKHWA	BARQAAB CONSULTING SERVICES (PVT)LIMITED LAHORE	SANAM DAM PROJECT LOWER DIR			DRAWN	IMTIAZ	**EMBANKMENT EXCAVATION X-SECTION AT RD 0+100**
					CHECKED	TANVIR ABBAS	
					SUBMITTED	TANVIR ABBAS	DATE: April, 2018 / DRAWING NO. **BQB-SDP-MD-07**
			REV.	DATE	APPROVED	M.T.A	

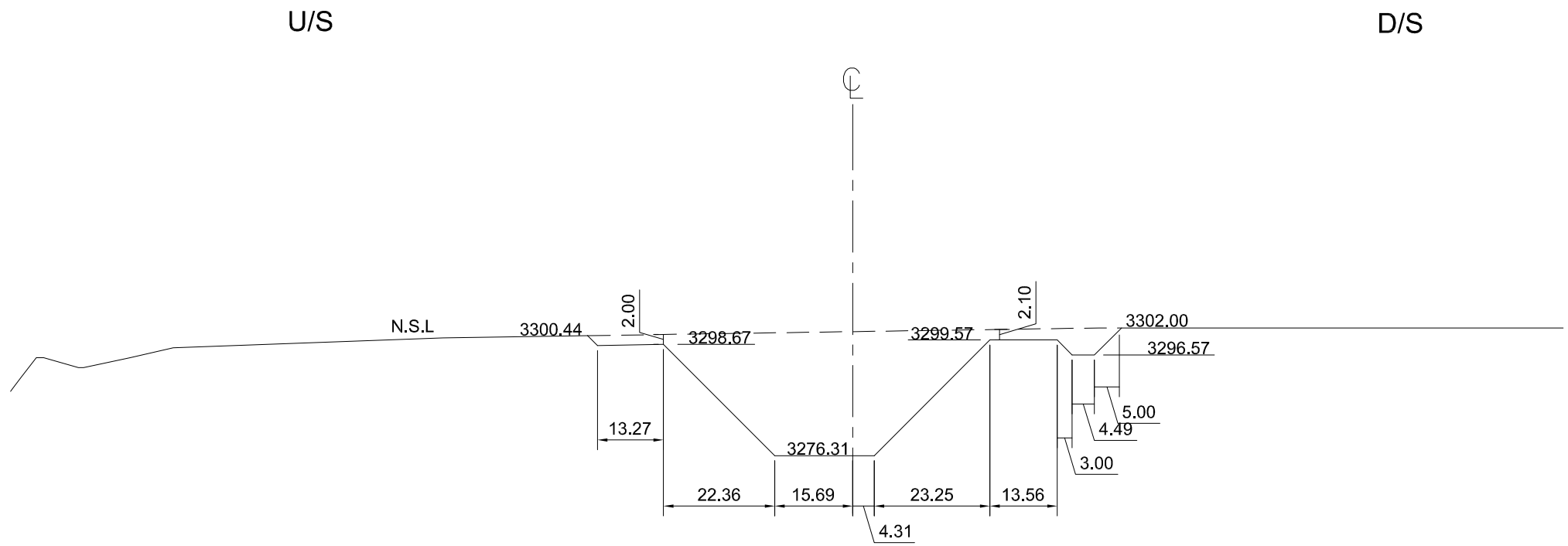

NOTES:-

1. **ALL DIMENSIONS ARE IN FEET**
2. **FOR LOCATION REF. DWG. NO. BQB-SDP-MD-04**
3. **DAM BODY SHOULD BE PLACED ON SOUND ROCK OR AS DIRECTED BY ENGINEER AT SITE**

0 30 60 90 FEET

SCALE: 1"=30 Feet

SMALL DAMS ORGANIZATION GOVERNMENT OF KHYBER PAKHTUNKHWA	BARQAAB CONSULTING SERVICES (PVT)LIMITED LAHORE	SANAM DAM PROJECT LOWER DIR			DRAWN	IMTIAZ
					CHECKED	TANVIR ABBAS
					SUBMITTED	TANVIR ABBAS
			REV.	DATE	APPROVED	M.T.A

EMBANKMENT EXCAVATION X-SECTION AT RD 0+150

DATE: April, 2018

DRAWING NO. **BQB-SDP-MD-08**

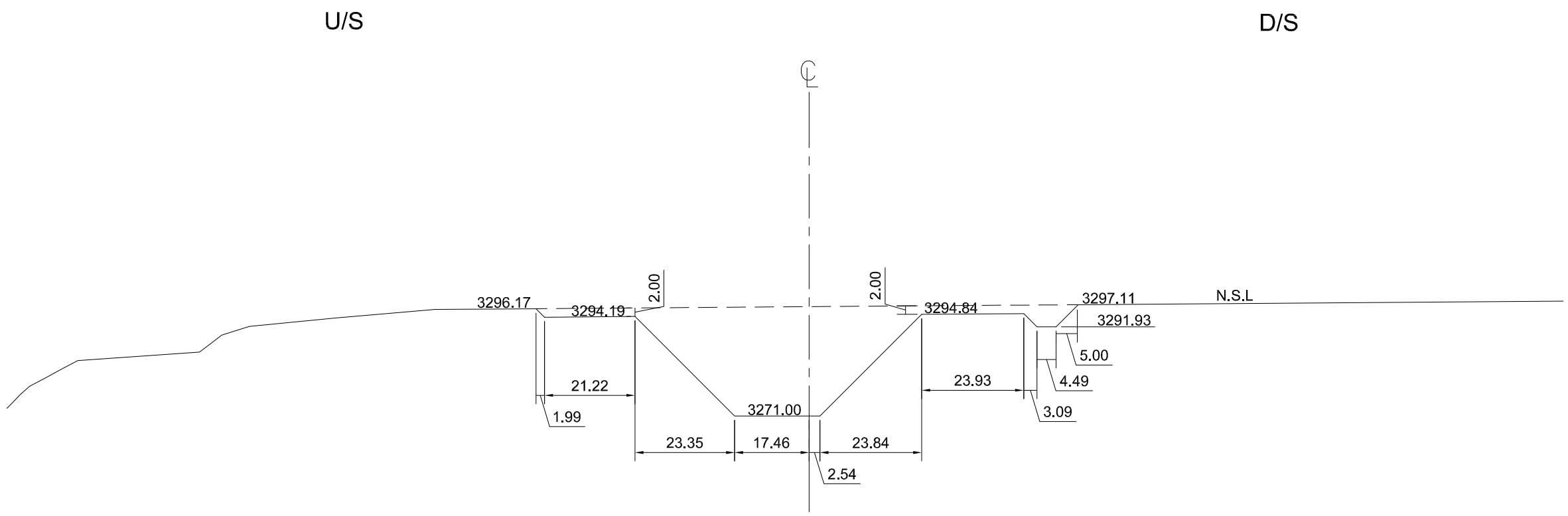

NOTES:-

1. **ALL DIMENSIONS ARE IN FEET**
2. **FOR LOCATION REF. DWG. NO. BQB-SDP-MD-04**
3. **DAM BODY SHOULD BE PLACED ON SOUND ROCK OR AS DIRECTED BY ENGINEER AT SITE**

0 30 60 90 FEET

SCALE: 1"=30 Feet

SMALL DAMS ORGANIZATION GOVERNMENT OF KHYBER PAKHTUNKHWA	BARQAAB CONSULTING SERVICES (PVT)LIMITED LAHORE	SANAM DAM PROJECT LOWER DIR			DRAWN	IMTIAZ
					CHECKED	TANVIR ABBAS
					SUBMITTED	TANVIR ABBAS
			REV.	DATE	APPROVED	M.T.A

EMBANKMENT EXCAVATION X-SECTION AT RD 0+200

DATE: April, 2018

DRAWING NO. **BQB-SDP-MD-09**

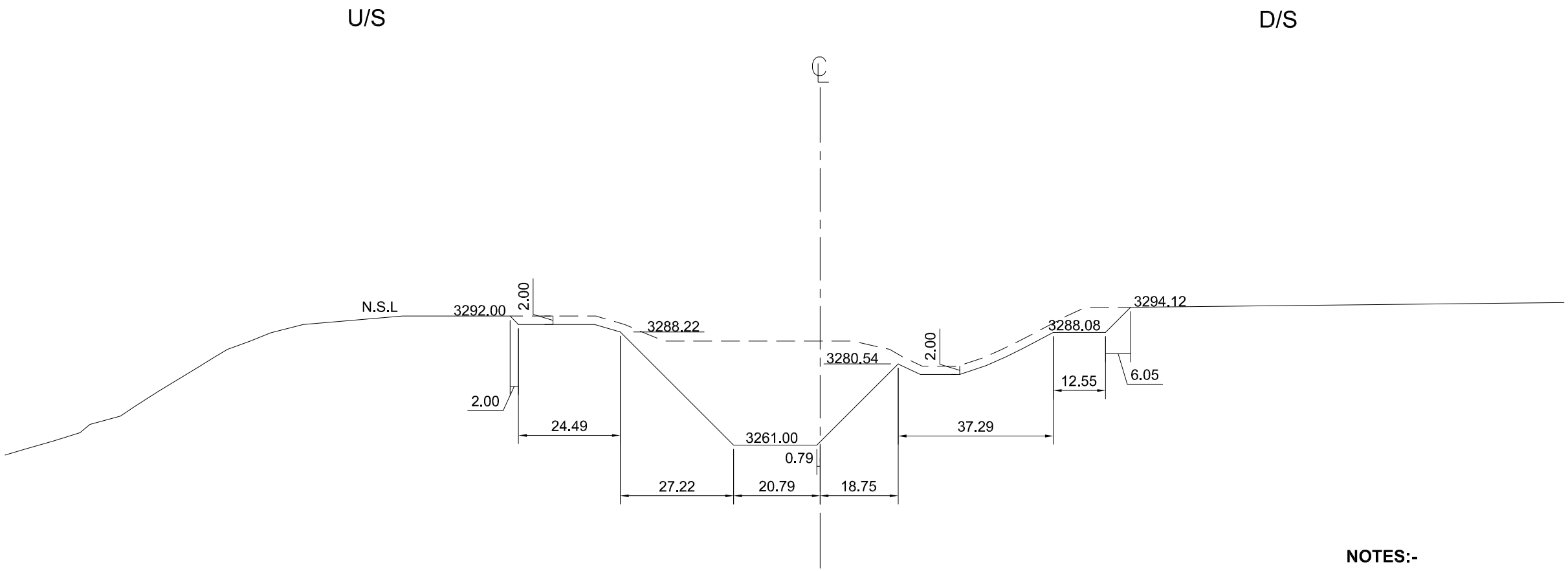

NOTES:-

1. **ALL DIMENSIONS ARE IN FEET**
2. **FOR LOCATION REF. DWG. NO. BQB-SDP-MD-04**
3. **DAM BODY SHOULD BE PLACED ON SOUND ROCK OR AS DIRECTED BY ENGINEER AT SITE**

0 30 60 90 FEET

SCALE: 1"=30 Feet

SMALL DAMS ORGANIZATION GOVERNMENT OF KHYBER PAKHTUNKHWA	BARQAAB CONSULTING SERVICES (PVT)LIMITED LAHORE	SANAM DAM PROJECT LOWER DIR			DRAWN	IMTIAZ	**EMBANKMENT EXCAVATION X-SECTION AT RD 0+250**
					CHECKED	TANVIR ABBAS	
					SUBMITTED	TANVIR ABBAS	DATE: April, 2018 / DRAWING NO. **BQB-SDP-MD-10**
			REV.	DATE	APPROVED	M.T.A	

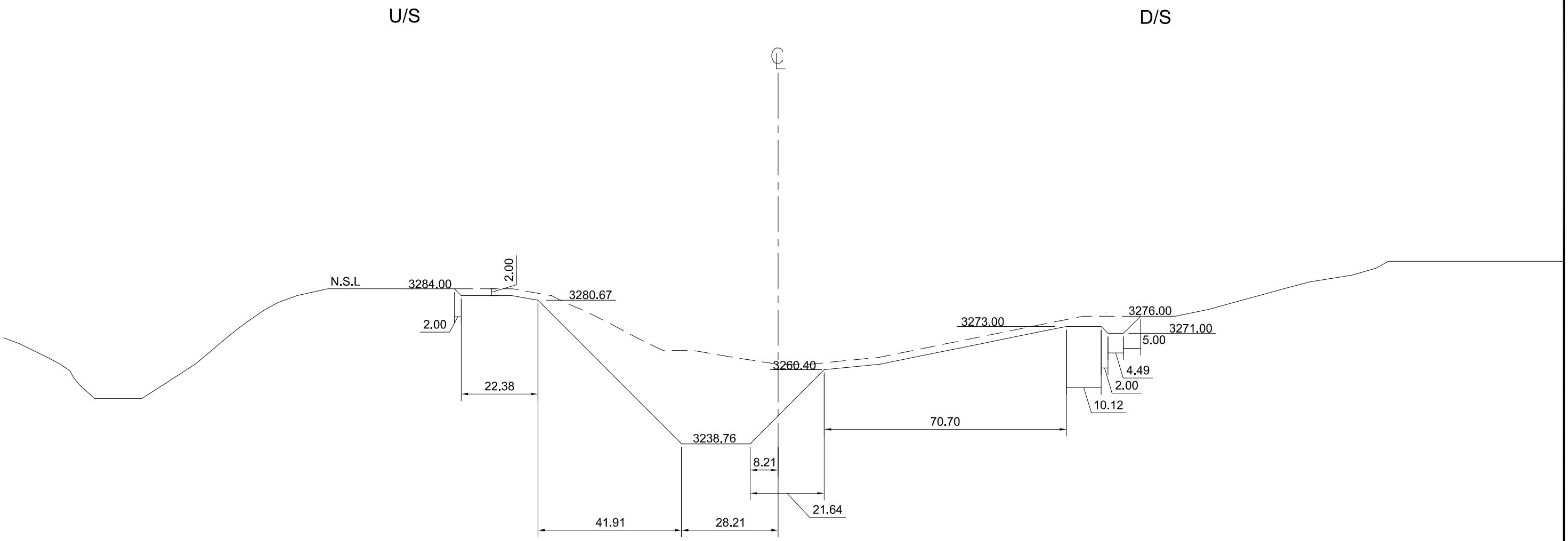

NOTES:-

1. **ALL DIMENSIONS ARE IN FEET**
2. **FOR LOCATION REF. DWG. NO. BQB-SDP-MD-04**
3. **DAM BODY SHOULD BE PLACED ON SOUND ROCK OR AS DIRECTED BY ENGINEER AT SITE**

0 30 60 90 FEET

SCALE: 1"=30 Feet

SMALL DAMS ORGANIZATION GOVERNMENT OF KHYBER PAKHTUNKHWA	BARQAAB CONSULTING SERVICES (PVT)LIMITED LAHORE	SANAM DAM PROJECT LOWER DIR			DRAWN	IMTIAZ	**EMBANKMENT EXCAVATION X-SECTION AT RD 0+300**
					CHECKED	TANVIR ABBAS	
					SUBMITTED	TANVIR ABBAS	DATE: April, 2018 / DRAWING NO. **BQB-SDP-MD-11**
			REV.	DATE	APPROVED	M.T.A	
				DESCRIPTION			

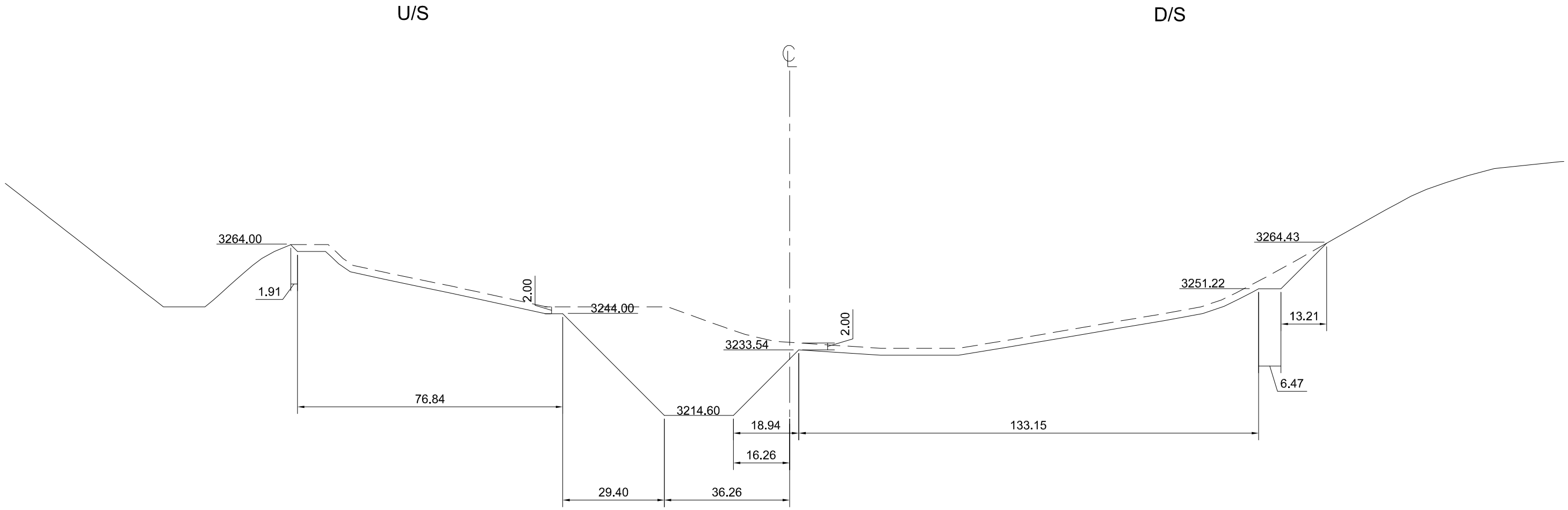

NOTES:-

1. **ALL DIMENSIONS ARE IN FEET**
2. **FOR LOCATION REF. DWG. NO. BQB-SDP-MD-04**
3. **DAM BODY SHOULD BE PLACED ON SOUND ROCK OR AS DIRECTED BY ENGINEER AT SITE**

0 30 60 90 FEET

SCALE: 1"=30 Feet

SMALL DAMS ORGANIZATION GOVERNMENT OF KHYBER PAKHTUNKHWA	BARQAAB CONSULTING SERVICES (PVT)LIMITED LAHORE	SANAM DAM PROJECT LOWER DIR			DRAWN	IMTIAZ
					CHECKED	TANVIR ABBAS
					SUBMITTED	TANVIR ABBAS
			REV.	DATE	APPROVED	M.T.A

EMBANKMENT EXCAVATION X-SECTION AT RD 0+350

DATE: April, 2018

DRAWING NO. **BQB-SDP-MD-12**

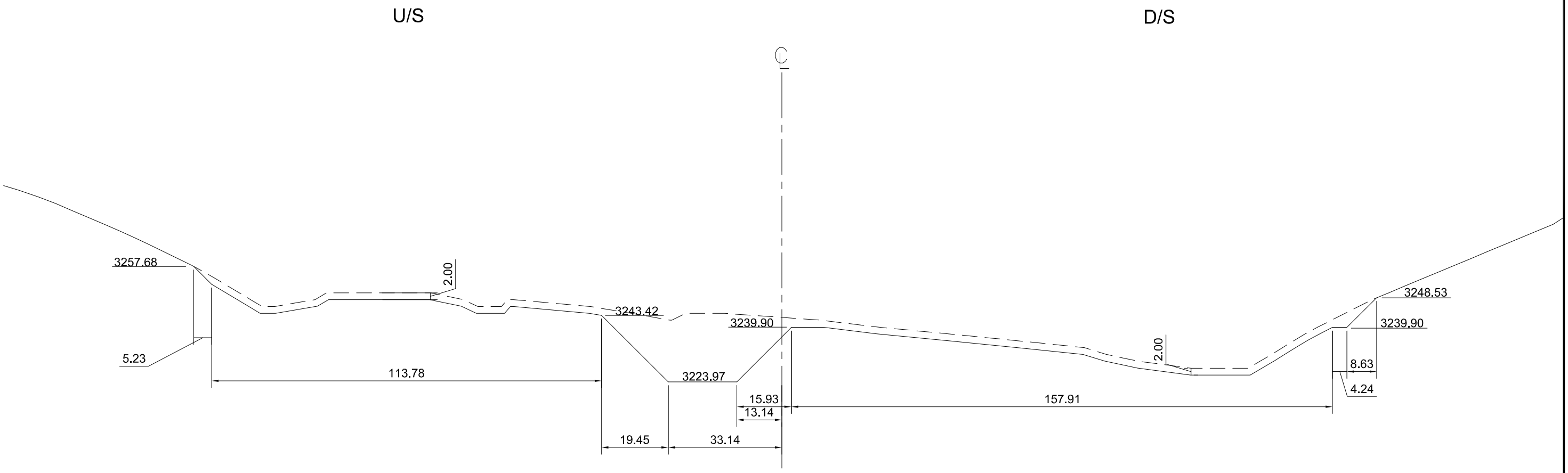

NOTES:-

1. **ALL DIMENSIONS ARE IN FEET**
2. **FOR LOCATION REF. DWG. NO. BQB-SDP-MD-04**
3. **DAM BODY SHOULD BE PLACED ON SOUND ROCK OR AS DIRECTED BY ENGINEER AT SITE**

0 30 60 90 FEET

SCALE: 1"=30 Feet

SMALL DAMS ORGANIZATION GOVERNMENT OF KHYBER PAKHTUNKHWA	BARQAAB CONSULTING SERVICES (PVT)LIMITED LAHORE	SANAM DAM PROJECT LOWER DIR			DRAWN	IMTIAZ	**EMBANKMENT EXCAVATION X-SECTION AT RD 0+400**
					CHECKED	TANVIR ABBAS	
					SUBMITTED	TANVIR ABBAS	DATE: April, 2018 / DRAWING NO. **BQB-SDP-MD-13**
			REV.	DATE	APPROVED	M.T.A	

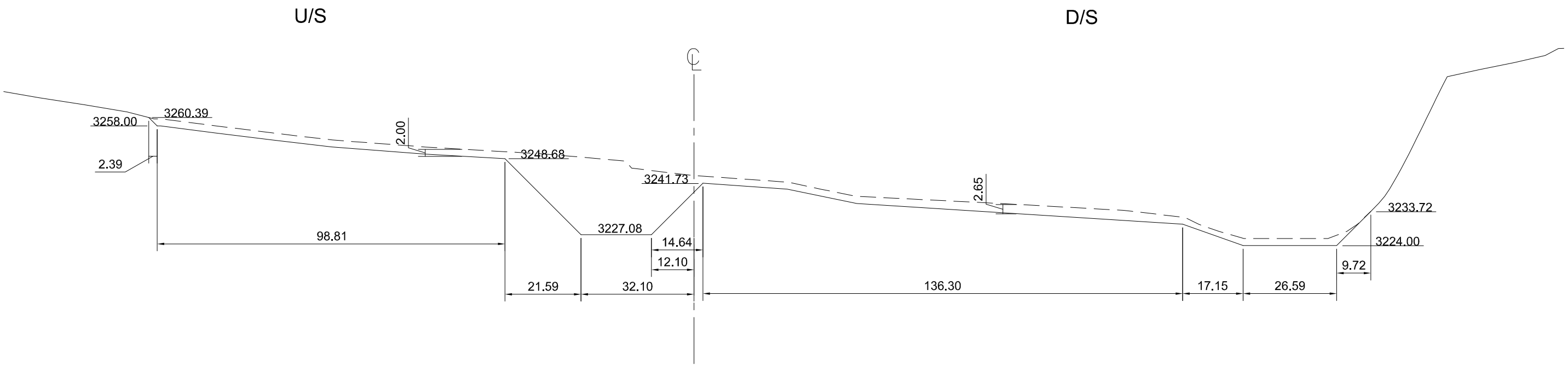

NOTES:-

1. **ALL DIMENSIONS ARE IN FEET**
2. **FOR LOCATION REF. DWG. NO. BQB-SDP-MD-04**
3. **DAM BODY SHOULD BE PLACED ON SOUND ROCK OR AS DIRECTED BY ENGINEER AT SITE**

0 30 60 90 FEET

SCALE: 1"=30 Feet

SMALL DAMS ORGANIZATION GOVERNMENT OF KHYBER PAKHTUNKHWA	BARQAAB CONSULTING SERVICES (PVT)LIMITED LAHORE	SANAM DAM PROJECT LOWER DIR			DRAWN: IMTIAZ CHECKED: TANVIR ABBAS SUBMITTED: TANVIR ABBAS APPROVED: M.T.A	**EMBANKMENT EXCAVATION X-SECTION AT RD 0+450** DATE: April, 2018 DRAWING NO. **BQB-SDP-MD-14**
			REV.	DATE	DESCRIPTION	

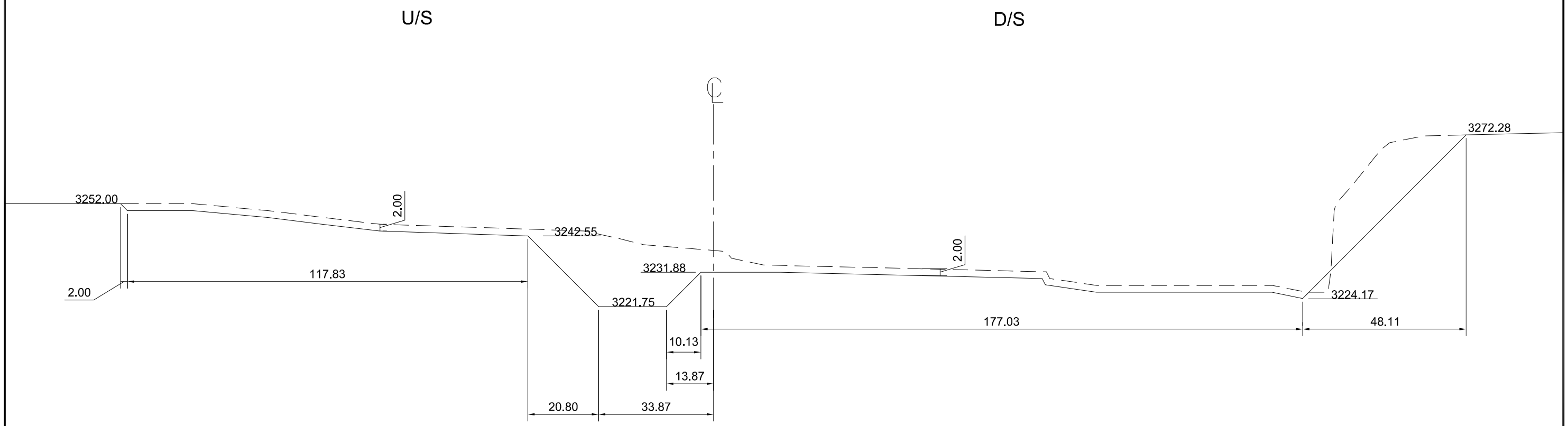

NOTES:-

1. **ALL DIMENSIONS ARE IN FEET**
2. **FOR LOCATION REF. DWG. NO. BQB-SDP-MD-04**
3. **DAM BODY SHOULD BE PLACED ON SOUND ROCK OR AS DIRECTED BY ENGINEER AT SITE**

0 30 60 90 FEET

SCALE: 1"=30 Feet

SMALL DAMS ORGANIZATION GOVERNMENT OF KHYBER PAKHTUNKHWA	BARQAAB CONSULTING SERVICES (PVT)LIMITED LAHORE	SANAM DAM PROJECT LOWER DIR				DRAWN	IMTIAZ	**EMBANKMENT EXCAVATION X-SECTION AT RD 0+500**	
						CHECKED	TANVIR ABBAS		
						SUBMITTED	TANVIR ABBAS	DATE: April, 2018	DRAWING NO. **BQB-SDP-MD-15**
			REV.	DATE	DESCRIPTION	APPROVED	M.T.A		

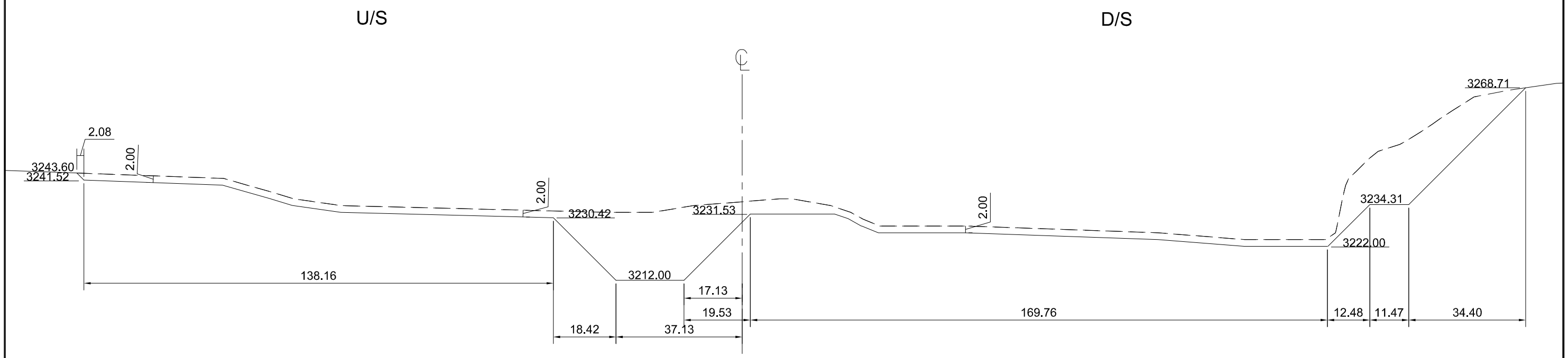

NOTES:-

1. **ALL DIMENSIONS ARE IN FEET**
2. **FOR LOCATION REF. DWG. NO. BQB-SDP-MD-04**
3. **DAM BODY SHOULD BE PLACED ON SOUND ROCK OR AS DIRECTED BY ENGINEER AT SITE**

0 30 60 90 FEET

SCALE: 1"=30 Feet

SMALL DAMS ORGANIZATION GOVERNMENT OF KHYBER PAKHTUNKHWA	BARQAAB CONSULTING SERVICES (PVT)LIMITED LAHORE	SANAM DAM PROJECT LOWER DIR				DRAWN	IMTIAZ	**EMBANKMENT EXCAVATION X-SECTION AT RD 0+550**	
						CHECKED	TANVIR ABBAS		
						SUBMITTED	TANVIR ABBAS	DATE: April, 2018	DRAWING NO. **BQB-SDP-MD-16**
			REV.	DATE	DESCRIPTION	APPROVED	M.T.A		

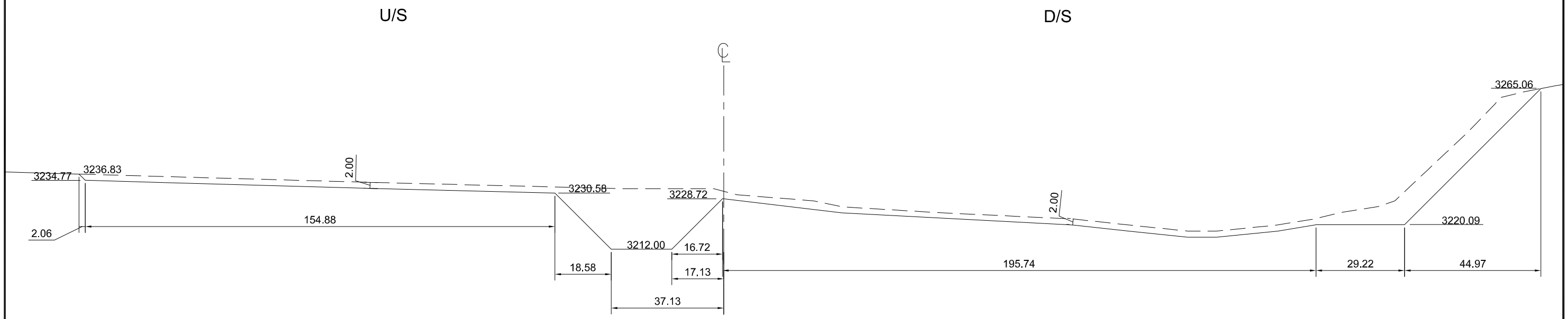

NOTES:-

1. **ALL DIMENSIONS ARE IN FEET**
2. **FOR LOCATION REF. DWG. NO. BQB-SDP-MD-04**
3. **DAM BODY SHOULD BE PLACED ON SOUND ROCK OR AS DIRECTED BY ENGINEER AT SITE**

0 30 60 90 FEET

SCALE: 1"=30 Feet

SMALL DAMS ORGANIZATION GOVERNMENT OF KHYBER PAKHTUNKHWA	BARQAAB CONSULTING SERVICES (PVT)LIMITED LAHORE	SANAM DAM PROJECT LOWER DIR				DRAWN	IMTIAZ	**EMBANKMENT EXCAVATION X-SECTION AT RD 0+600**	
						CHECKED	TANVIR ABBAS		
						SUBMITTED	TANVIR ABBAS	DATE: April, 2018	DRAWING NO. **BQB-SDP-MD-17**
			REV.	DATE	DESCRIPTION	APPROVED	M.T.A		

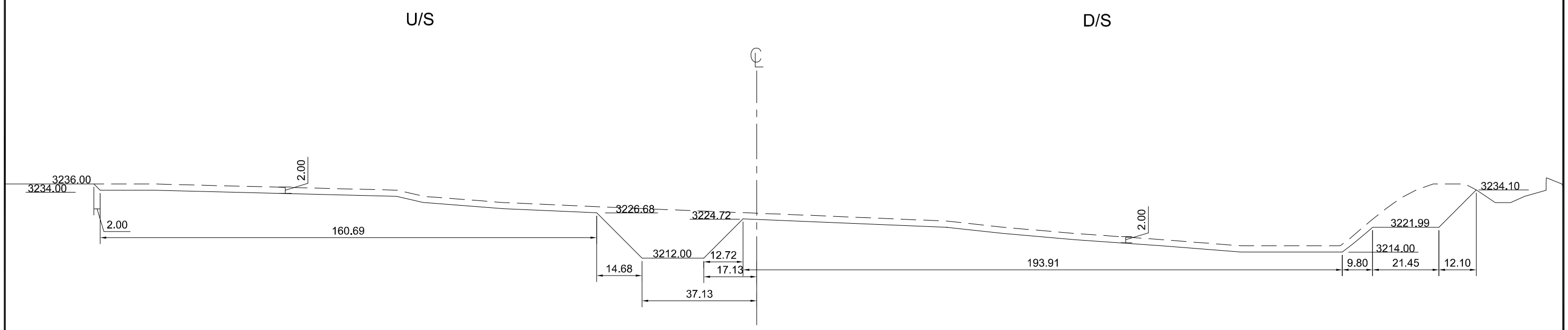

NOTES:-

1. **ALL DIMENSIONS ARE IN FEET**
2. **FOR LOCATION REF. DWG. NO. BQB-SDP-MD-04**
3. **DAM BODY SHOULD BE PLACED ON SOUND ROCK OR AS DIRECTED BY ENGINEER AT SITE**

0 30 60 90 FEET

SCALE: 1"=30 Feet

SMALL DAMS ORGANIZATION GOVERNMENT OF KHYBER PAKHTUNKHWA	BARQAAB CONSULTING SERVICES (PVT)LIMITED LAHORE	SANAM DAM PROJECT LOWER DIR		DRAWN	IMTIAZ	**EMBANKMENT EXCAVATION X-SECTION AT RD 0+650**
				CHECKED	TANVIR ABBAS	
				SUBMITTED	TANVIR ABBAS	DATE: April, 2018 / DRAWING NO. **BQB-SDP-MD-18**
			REV. / DATE / DESCRIPTION	APPROVED	M.T.A	

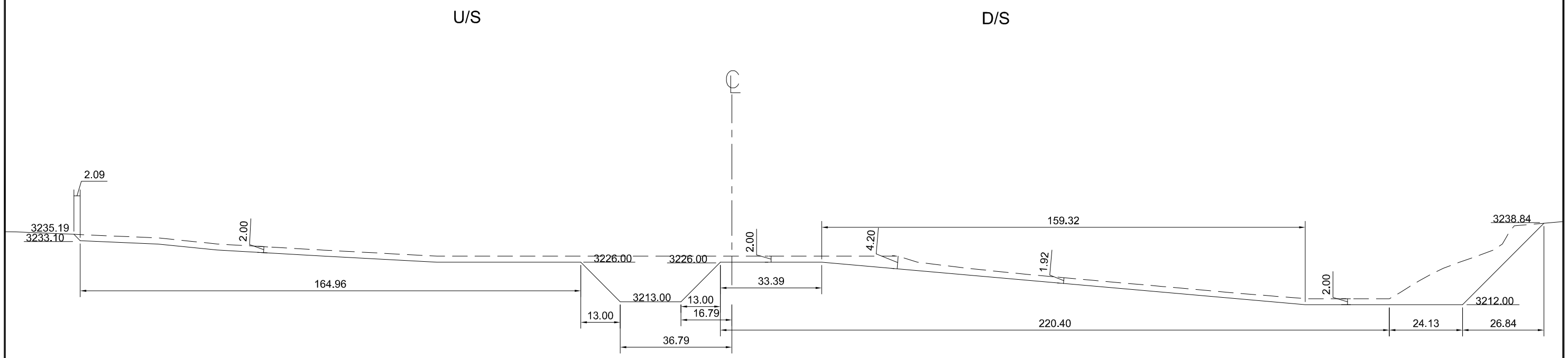

NOTES:-

1. **ALL DIMENSIONS ARE IN FEET**
2. **FOR LOCATION REF. DWG. NO. BQB-SDP-MD-04**
3. **DAM BODY SHOULD BE PLACED ON SOUND ROCK OR AS DIRECTED BY ENGINEER AT SITE**

0 30 60 90 FEET

SCALE: 1"=30 Feet

SMALL DAMS ORGANIZATION GOVERNMENT OF KHYBER PAKHTUNKHWA	BARQAAB CONSULTING SERVICES (PVT)LIMITED LAHORE	SANAM DAM PROJECT LOWER DIR			DRAWN	IMTIAZ	**EMBANKMENT EXCAVATION X-SECTION AT RD 0+700**
					CHECKED	TANVIR ABBAS	
					SUBMITTED	TANVIR ABBAS	DATE: April, 2018 / DRAWING NO. **BQB-SDP-MD-19**
			REV.	DATE	APPROVED	M.T.A	
				DESCRIPTION			

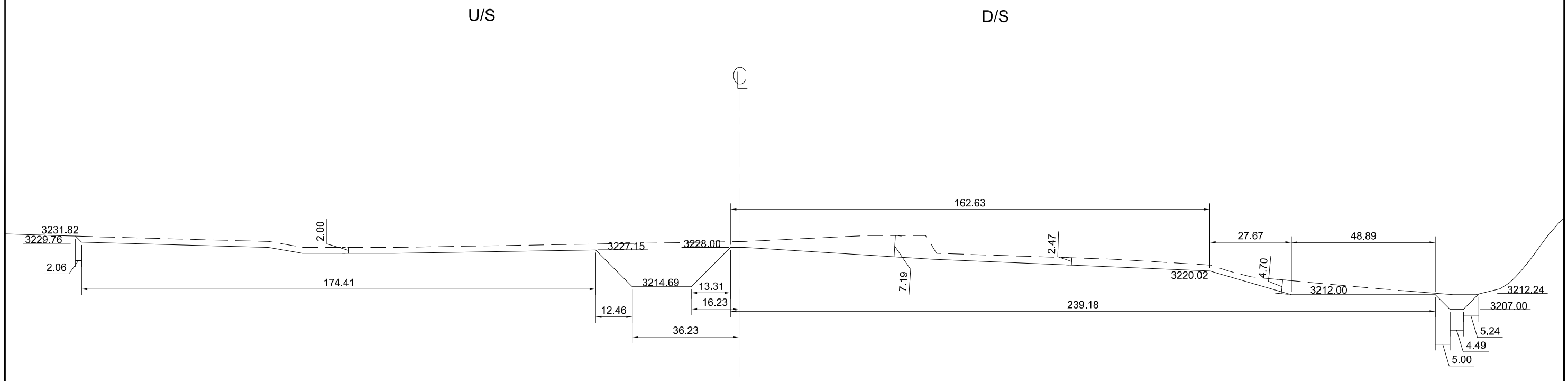

NOTES:-

1. **ALL DIMENSIONS ARE IN FEET**
2. **FOR LOCATION REF. DWG. NO. BQB-SDP-MD-04**
3. **DAM BODY SHOULD BE PLACED ON SOUND ROCK OR AS DIRECTED BY ENGINEER AT SITE**

0 30 60 90 FEET

SCALE: 1"=30 Feet

SMALL DAMS ORGANIZATION GOVERNMENT OF KHYBER PAKHTUNKHWA	BARQAAB CONSULTING SERVICES (PVT)LIMITED LAHORE	SANAM DAM PROJECT LOWER DIR				DRAWN	IMTIAZ	**EMBANKMENT EXCAVATION X-SECTION AT RD 0+750**	
						CHECKED	TANVIR ABBAS		
						SUBMITTED	TANVIR ABBAS	DATE: April, 2018	DRAWING NO. **BQB-SDP-MD-20**
			REV.	DATE	DESCRIPTION	APPROVED	M.T.A		

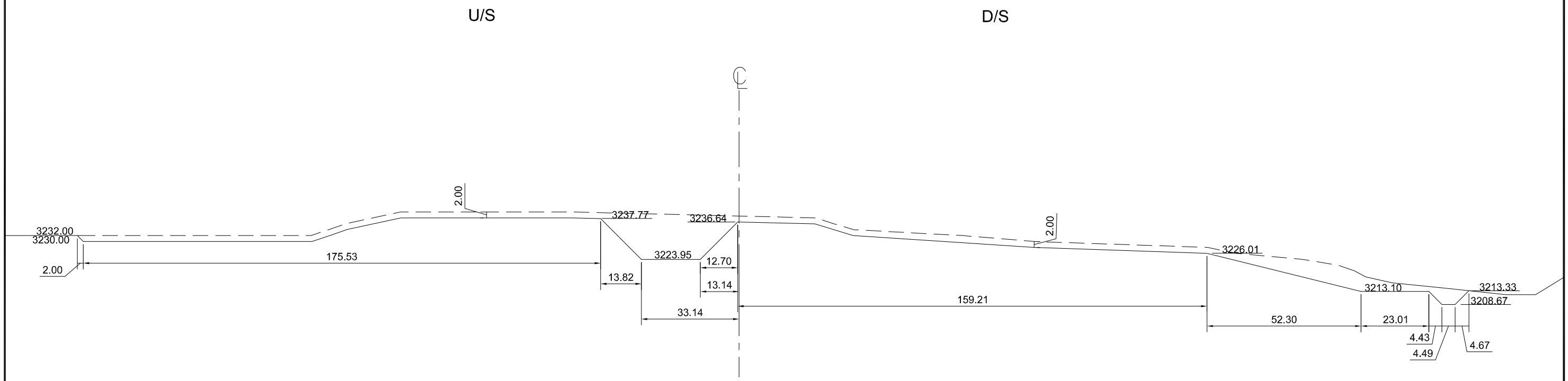

NOTES:-

1. **ALL DIMENSIONS ARE IN FEET**
2. **FOR LOCATION REF. DWG. NO. BQB-SDP-MD-04**
3. **DAM BODY SHOULD BE PLACED ON SOUND ROCK OR AS DIRECTED BY ENGINEER AT SITE**

0 30 60 90 FEET

SCALE: 1"=30 Feet

SMALL DAMS ORGANIZATION GOVERNMENT OF KHYBER PAKHTUNKHWA	BARQAAB CONSULTING SERVICES (PVT)LIMITED LAHORE	SANAM DAM PROJECT LOWER DIR			DRAWN	IMTIAZ	**EMBANKMENT EXCAVATION X-SECTION AT RD 0+800**
					CHECKED	TANVIR ABBAS	
					SUBMITTED	TANVIR ABBAS	DATE: April, 2018 / DRAWING NO. **BQB-SDP-MD-21**
			REV.	DATE	APPROVED	M.T.A	

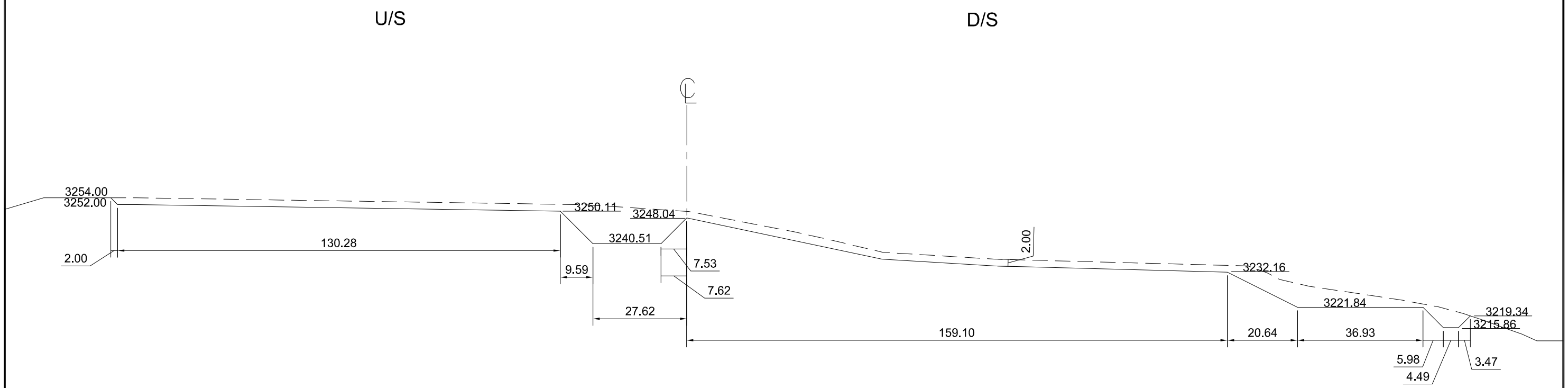

NOTES:-

1. **ALL DIMENSIONS ARE IN FEET**
2. **FOR LOCATION REF. DWG. NO. BQB-SDP-MD-04**
3. **DAM BODY SHOULD BE PLACED ON SOUND ROCK OR AS DIRECTED BY ENGINEER AT SITE**

0 30 60 90 FEET

SCALE: 1"=30 Feet

SMALL DAMS ORGANIZATION GOVERNMENT OF KHYBER PAKHTUNKHWA	BARQAAB CONSULTING SERVICES (PVT)LIMITED LAHORE	SANAM DAM PROJECT LOWER DIR			DRAWN	IMTIAZ
					CHECKED	TANVIR ABBAS
					SUBMITTED	TANVIR ABBAS
			REV.	DATE	DESCRIPTION	APPROVED	M.T.A

EMBANKMENT EXCAVATION X-SECTION AT RD 0+850

DATE: April, 2018

DRAWING NO. **BQB-SDP-MD-22**

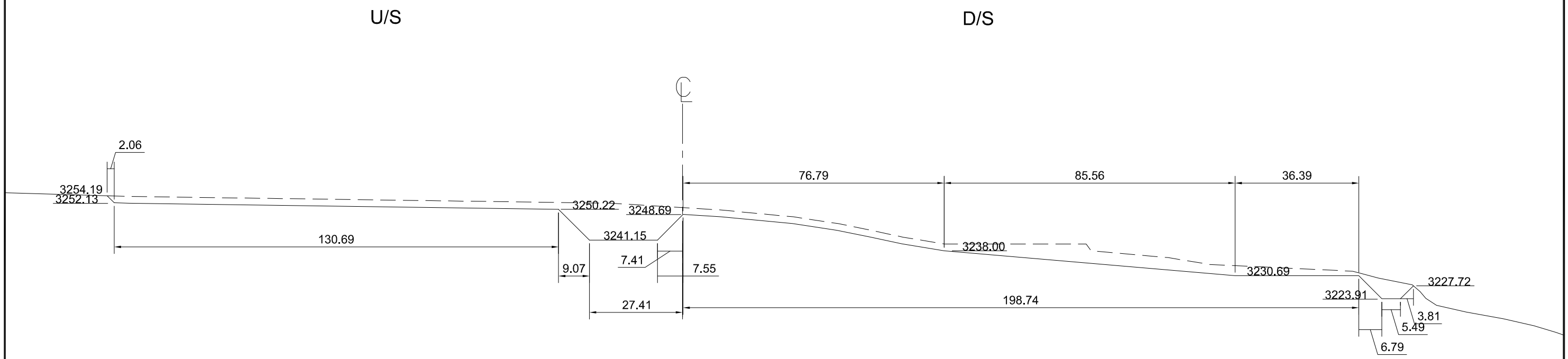

NOTES:-

1. **ALL DIMENSIONS ARE IN FEET**
2. **FOR LOCATION REF. DWG. NO. BQB-SDP-MD-04**
3. **DAM BODY SHOULD BE PLACED ON SOUND ROCK OR AS DIRECTED BY ENGINEER AT SITE**

0 30 60 90 FEET

SCALE: 1"=30 Feet

SMALL DAMS ORGANIZATION GOVERNMENT OF KHYBER PAKHTUNKHWA	BARQAAB CONSULTING SERVICES (PVT)LIMITED LAHORE	SANAM DAM PROJECT LOWER DIR			DRAWN	IMTIAZ
					CHECKED	TANVIR ABBAS
					SUBMITTED	TANVIR ABBAS
			REV.	DATE	APPROVED	M.T.A

EMBANKMENT EXCAVATION X-SECTION AT RD 0+870

DATE: April, 2018

DRAWING NO. **BQB-SDP-MD-23**

INSTRUCTIONS FOR GROUTING

The grouting works consist of curtain grouting in abutment of the dam.

The spacing and depth of grout holes are subject to variation during grouting based on the results and evaluations of permeability and grout-take data.

The grout mix comprises cement suspension stabilized with bentonite.

Some important details for execution of grouting are given below.

- Slush grouting will be requird for sealing the rock surface of the structures foundation after cleaning. It will cortain 2 to 3 parts of sand to one part of portland cement. The sand will be well graded conforming to ASTM concrete. Its moisture content will be sufficient to produce a mixture which can be poured to penetrate and fill open joints, fissures and fractures in the rock surface and can be broomed over and into the rock surface to fill minor surface discontinuties and irregularities.
- All superficial joints and fissure within the rock surface near the grout hole will be sealed by slush grouting, as directed by the engineer.
- Inflatable or mechanical packers, having a sealing element of minimum length of 8 times of the hole diameter, will be used. Mechanical packers will be preferred for near surface grouting stage.
- Grout pressures will depend upon the depth of grout section. In general, the maximum pressure as measured at the collar of the hole (gauge pressure) shall not exceed 0.07kg/cm² per 0.30m(one psi per foot) of depth when measured normal to the ground surface to the middle of the grout section. Table shows typical pressures for grouting sections.
- Grouting will start with water cement ratio 3:1 with 2% bentonite which may be swiched to a thicker mix (water cement 2:1 by volume), in case of fast take or when maximum pressure is not obtained, or when grout-take does not show change even after 30 kg of cement per foot. Switch to thinner mix (water cement 5:1 by volume), in case of very low initial take.
- The bentonite slurry will be pre-activated (soaked and homogenized) over a preiod of 10 hours in a mix of 1 kg bentonite to 10 liter water.
- During grouting operation, all leaks noticed in the adjacent areas will be plugged immediately and no rock movement will be allowed.
- Grouting of a hole will continue until the hole takes grout at a rate of less than one cubic foot (0.0283 cubic meter) of the grout mixture in 10 minutes at the allowable gauge pressure. The grouting rate during the end phase will not exceed 2 liter per m.
- Once refusal is achieved, the in-let and return valves will be closed and packer will be kept inflated or in-place till dissipation of the gauge pressure.
- Wait for 12 hours before next stage grouting to let the grout stone hardened.
- Take sounding of the hole after completion of waiting time after final stage grouting and backfill with neat cement slurry (water cement ratio 1:1) by tremie method.
- No adjacent grout hole will be grouted simultaneously.
- All testing and grouting recored will be maintained and summaries will be prepared or as directed.
- Upon completion of grouting works a comprehensive grouting plan will be prepared along with cross section indicating cement-take quantities.
- Embankment construction in any section will only be started after thorough examination and review of all relevant data.
- Material requirment for all grouting works are briefly descibed below.

a) Water absorption potential of the bentonite shall be at least 500 percent. flow properties of the grout mix shall correspond to marsh flow time >30 seconds.

b) The water cement ratio shall not preferably vary beyond the limits of 1:1 to 4:1 or as directed.

c) In case of excessively large grout-take, the cement suspension may be blended with clay, stone dust, fly ash or similar material.

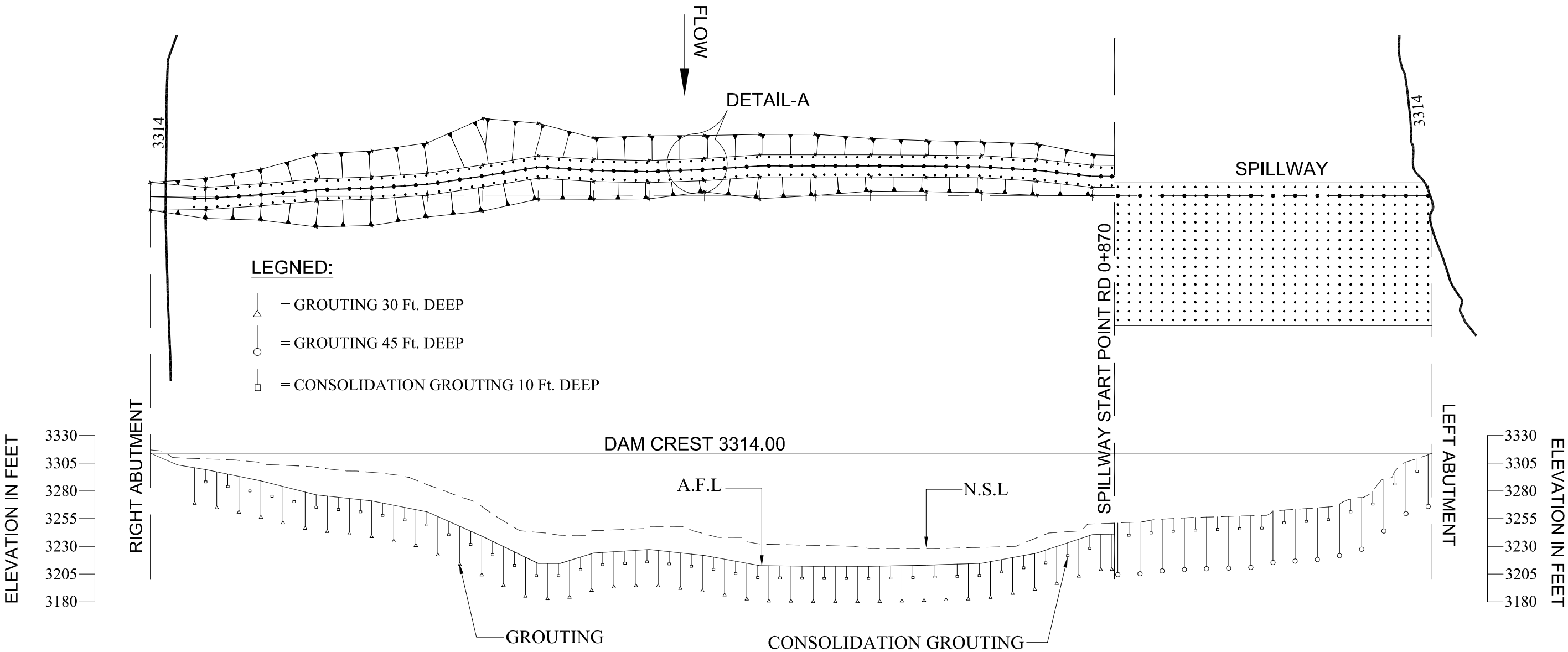

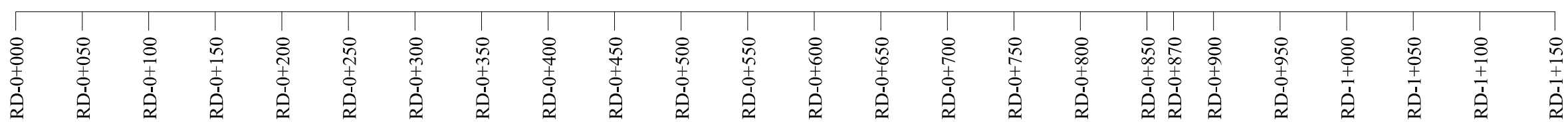

GROUT LINE L-SECTION

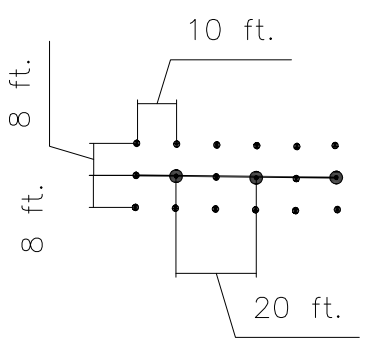

DETAIL-A

NOTES:-

1. ALL DIMENSIONS ARE IN FEET.

SMALL DAMS ORGANIZATION GOVERNMENT OF KHYBER PAKHTUNKHWA	BARQAAB CONSULTING SERVICES (PVT)LIMITED LAHORE	SANAM DAM PROJECT LOWER DIR		DRAWN	IMTIAZ
				CHECKED	TANVIR ABBAS
				SUBMITTED	TANVIR ABBAS
			REV. / DATE / DESCRIPTION	APPROVED	M.T.A

EMBANKMENT DAM & SPILLWAY GROUTING

DATE: April, 2018

DRAWING NO. **BQB-SDP-MD-25**

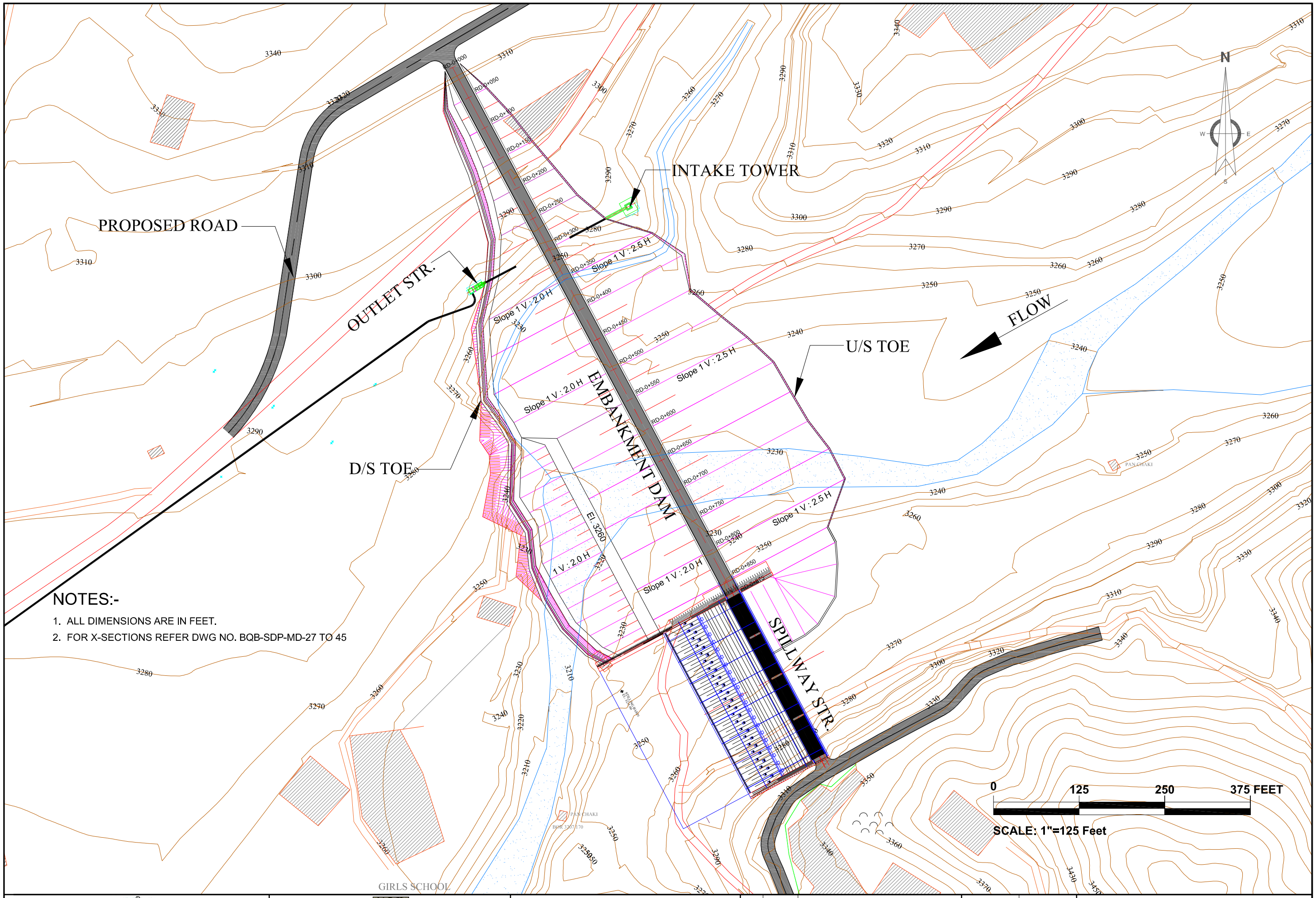

NOTES:-

1. ALL DIMENSIONS ARE IN FEET.
2. FOR X-SECTIONS REFER DWG NO. BQB-SDP-MD-27 TO 45

SMALL DAMS ORGANIZATION GOVERNMENT OF KHYBER PAKHTUNKHWA	BARQAAB CONSULTING SERVICES (PVT)LIMITED LAHORE	SANAM DAM PROJECT LOWER DIR		DRAWN	IMTIAZ AHMED	EMBANKMENT DAM PLAN
				CHECKED	TANVIR ABBAS	
				SUBMITTED	TANVIR ABBAS	DATE: April, 2018 / DRAWING NO. BQB-SDP-MD-26
			REV. / DATE / DESCRIPTION	APPROVED	M.T.A	

EMBANKMENT MATERIALS

ZONE	MATERIAL
1	SILTY CLAY
2	FINE SAND FILTER
3	COARSE SAND FILTER
4	SANDY GRAVEL FILL
5	BEDDING FOR RIP RAP - WASHED GRAVEL
6	RIP RAP - SELECTED QUARRIED
7	GRAVEL DRAIN
8	COBBLES & BOULDERS

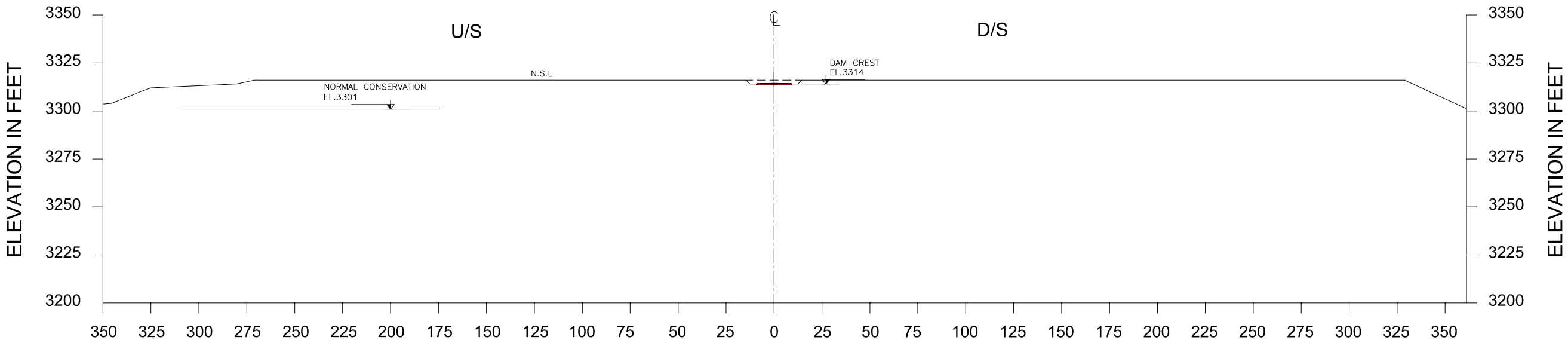

NOTES:-

1. **ALL DIMENSIONS ARE IN FEET**
2. **FOR LOCATION REF. DWG. NO. BQB-SDP-MD-26**
3. **DAM CORE SHOULD BE PLACED ON SOUND ROCK OR AS DIRECTED BY ENGINEER AT SITE**
4. **FILTER MATERIAL WILL REQUIRED PROCESSING /SCREENING FROM SUITABLE AVAILABLE MATERIAL AT SITE**

0 60 120 180 FEET

SCALE: 1"=60 Feet

SMALL DAMS ORGANIZATION GOVERNMENT OF KHYBER PAKHTUNKHWA	BARQAAB CONSULTING SERVICES (PVT)LIMITED LAHORE	SANAM DAM PROJECT LOWER DIR	REV.	DATE	DESCRIPTION	DRAWN: IMTIAZ CHECKED: TANVIR ABBAS SUBMITTED: TANVIR ABBAS APPROVED: M.T.A	**MAIN EMBANKMENT X-SECTION AT RD 0+000** DATE: April, 2018 DRAWING NO. **BQB-SDP-MD-27**

EMBANKMENT MATERIALS

ZONE	MATERIAL
1	SILTY CLAY
2	FINE SAND FILTER
3	COARSE SAND FILTER
4	SANDY GRAVEL FILL
5	BEDDING FOR RIP RAP - WASHED GRAVEL
6	RIP RAP - SELECTED QUARRIED
7	GRAVEL DRAIN
8	COBBLES & BOULDERS

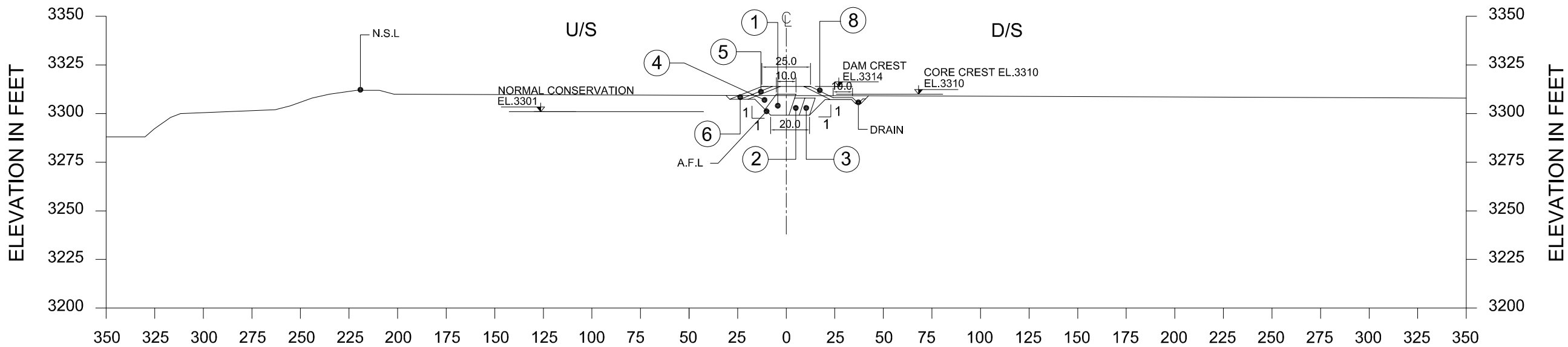

NOTES:-

1. **ALL DIMENSIONS ARE IN FEET**
2. **FOR LOCATION REF. DWG. NO. BQB-SDP-MD-26**
3. **DAM CORE SHOULD BE PLACED ON SOUND ROCK OR AS DIRECTED BY ENGINEER AT SITE**
4. **FILTER MATERIAL WILL REQUIRED PROCESSING /SCREENING FROM SUITABLE AVAILABLE MATERIAL AT SITE**

0 60 120 180 FEET

SCALE: 1"=60 Feet

SMALL DAMS ORGANIZATION GOVERNMENT OF KHYBER PAKHTUNKHWA	BARQAAB CONSULTING SERVICES (PVT)LIMITED LAHORE	SANAM DAM PROJECT LOWER DIR	REV.	DATE	DESCRIPTION	DRAWN: IMTIAZ CHECKED: TANVIR ABBAS SUBMITTED: TANVIR ABBAS APPROVED: M.T.A	**MAIN EMBANKMENT X-SECTION AT RD 0+050** DATE: April, 2018 DRAWING NO. **BQB-SDP-MD-28**

EMBANKMENT MATERIALS

ZONE	MATERIAL
1	SILTY CLAY
2	FINE SAND FILTER
3	COARSE SAND FILTER
4	SANDY GRAVEL FILL
5	BEDDING FOR RIP RAP - WASHED GRAVEL
6	RIP RAP - SELECTED QUARRIED
7	GRAVEL DRAIN
8	COBBLES & BOULDERS

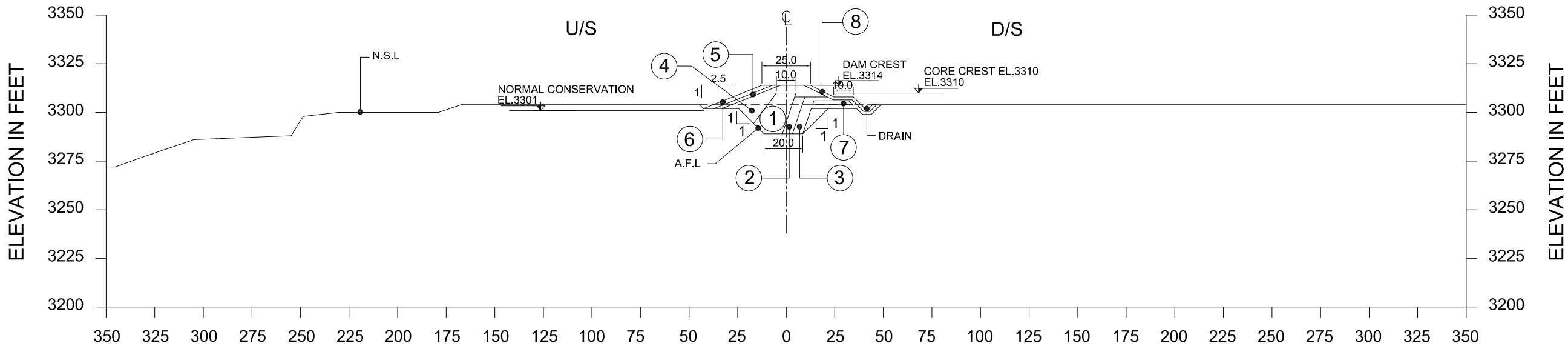

NOTES:-

1. **ALL DIMENSIONS ARE IN FEET**
2. **FOR LOCATION REF. DWG. NO. BQB-SDP-MD-26**
3. **DAM CORE SHOULD BE PLACED ON SOUND ROCK OR AS DIRECTED BY ENGINEER AT SITE**
4. **FILTER MATERIAL WILL REQUIRED PROCESSING /SCREENING FROM SUITABLE AVAILABLE MATERIAL AT SITE**

0 60 120 180 FEET

SCALE: 1"=60 Feet

SMALL DAMS ORGANIZATION GOVERNMENT OF KHYBER PAKHTUNKHWA	BARQAAB CONSULTING SERVICES (PVT)LIMITED LAHORE	SANAM DAM PROJECT LOWER DIR	REV.	DATE	DESCRIPTION	DRAWN: IMTIAZ CHECKED: TANVIR ABBAS SUBMITTED: TANVIR ABBAS APPROVED: M.T.A	**MAIN EMBANKMENT X-SECTION AT RD 0+100** DATE: April, 2018 DRAWING NO. **BQB-SDP-MD-29**

EMBANKMENT MATERIALS

ZONE	MATERIAL
1	SILTY CLAY
2	FINE SAND FILTER
3	COARSE SAND FILTER
4	SANDY GRAVEL FILL
5	BEDDING FOR RIP RAP - WASHED GRAVEL
6	RIP RAP - SELECTED QUARRIED
7	GRAVEL DRAIN
8	COBBLES & BOULDERS

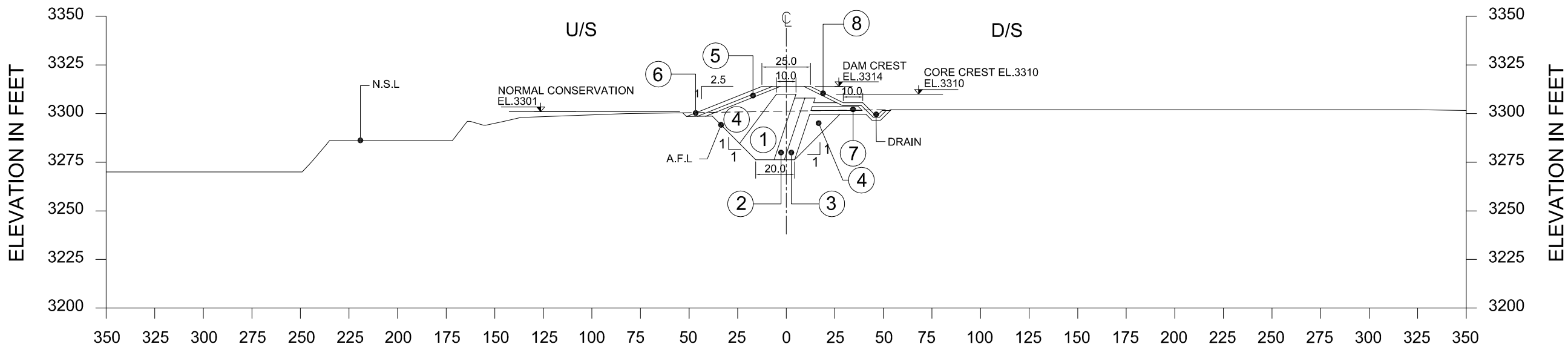

NOTES:-

1. **ALL DIMENSIONS ARE IN FEET**
2. **FOR LOCATION REF. DWG. NO. BQB-SDP-MD-26**
3. **DAM CORE SHOULD BE PLACED ON SOUND ROCK OR AS DIRECTED BY ENGINEER AT SITE**
4. **FILTER MATERIAL WILL REQUIRED PROCESSING /SCREENING FROM SUITABLE AVAILABLE MATERIAL AT SITE**

0 60 120 180 FEET

SCALE: 1"=60 Feet

SMALL DAMS ORGANIZATION GOVERNMENT OF KHYBER PAKHTUNKHWA	BARQAAB CONSULTING SERVICES (PVT)LIMITED LAHORE	SANAM DAM PROJECT LOWER DIR	REV.	DATE	DESCRIPTION	DRAWN: IMTIAZ CHECKED: TANVIR ABBAS SUBMITTED: TANVIR ABBAS APPROVED: M.T.A	**MAIN EMBANKMENT X-SECTION AT RD 0+150** DATE: April, 2018 DRAWING NO. **BQB-SDP-MD-30**

EMBANKMENT MATERIALS

ZONE	MATERIAL
1	SILTY CLAY
2	FINE SAND FILTER
3	COARSE SAND FILTER
4	SANDY GRAVEL FILL
5	BEDDING FOR RIP RAP - WASHED GRAVEL
6	RIP RAP - SELECTED QUARRIED
7	GRAVEL DRAIN
8	COBBLES & BOULDERS

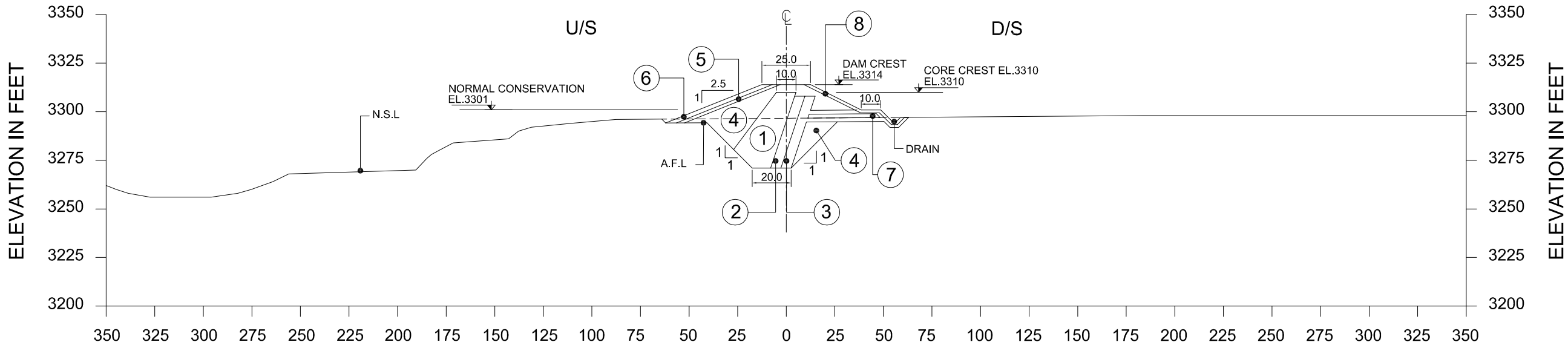

NOTES:-

1. **ALL DIMENSIONS ARE IN FEET**
2. **FOR LOCATION REF. DWG. NO. BQB-SDP-MD-26**
3. **DAM CORE SHOULD BE PLACED ON SOUND ROCK OR AS DIRECTED BY ENGINEER AT SITE**
4. **FILTER MATERIAL WILL REQUIRED PROCESSING /SCREENING FROM SUITABLE AVAILABLE MATERIAL AT SITE**

0 60 120 180 FEET

SCALE: 1"=60 Feet

SMALL DAMS ORGANIZATION GOVERNMENT OF KHYBER PAKHTUNKHWA	BARQAAB CONSULTING SERVICES (PVT)LIMITED LAHORE	SANAM DAM PROJECT LOWER DIR	REV.	DATE	DESCRIPTION	DRAWN: IMTIAZ CHECKED: TANVIR ABBAS SUBMITTED: TANVIR ABBAS APPROVED: M.T.A	**MAIN EMBANKMENT X-SECTION AT RD 0+200** DATE: April, 2018 DRAWING NO. **BQB-SDP-MD-31**

EMBANKMENT MATERIALS

ZONE	MATERIAL
1	SILTY CLAY
2	FINE SAND FILTER
3	COARSE SAND FILTER
4	SANDY GRAVEL FILL
5	BEDDING FOR RIP RAP - WASHED GRAVEL
6	RIP RAP - SELECTED QUARRIED
7	GRAVEL DRAIN
8	COBBLES & BOULDERS

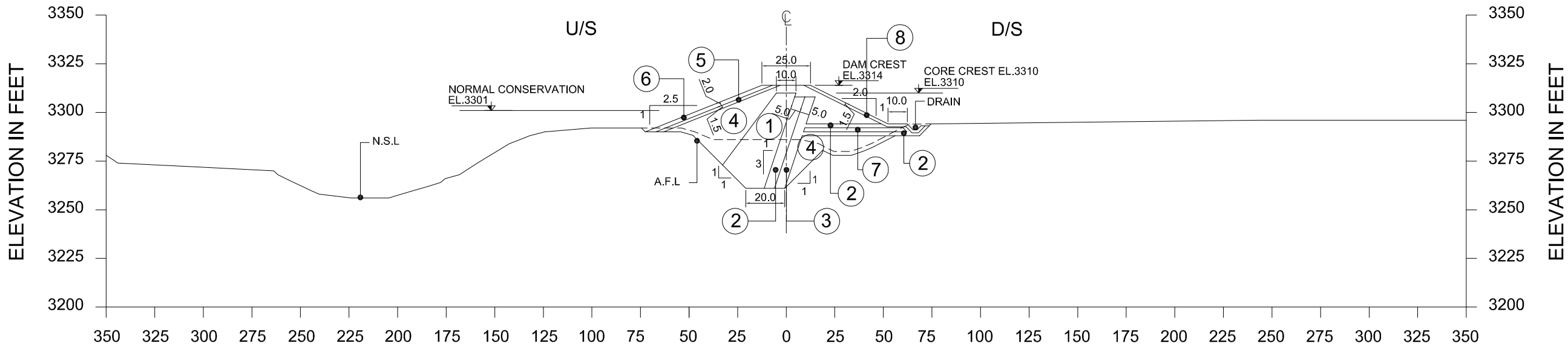

NOTES:-

1. **ALL DIMENSIONS ARE IN FEET**
2. **FOR LOCATION REF. DWG. NO. BQB-SDP-MD-26**
3. **DAM CORE SHOULD BE PLACED ON SOUND ROCK OR AS DIRECTED BY ENGINEER AT SITE**
4. **FILTER MATERIAL WILL REQUIRED PROCESSING /SCREENING FROM SUITABLE AVAILABLE MATERIAL AT SITE**

0 60 120 180 FEET

SCALE: 1"=60 Feet

SMALL DAMS ORGANIZATION GOVERNMENT OF KHYBER PAKHTUNKHWA	BARQAAB CONSULTING SERVICES (PVT)LIMITED LAHORE	SANAM DAM PROJECT LOWER DIR	REV.	DATE	DESCRIPTION	DRAWN: IMTIAZ CHECKED: TANVIR ABBAS SUBMITTED: TANVIR ABBAS APPROVED: M.T.A	**MAIN EMBANKMENT X-SECTION AT RD 0+250** DATE: April, 2018 DRAWING NO. **BQB-SDP-MD-32**

EMBANKMENT MATERIALS

ZONE	MATERIAL
1	SILTY CLAY
2	FINE SAND FILTER
3	COARSE SAND FILTER
4	SANDY GRAVEL FILL
5	BEDDING FOR RIP RAP - WASHED GRAVEL
6	RIP RAP - SELECTED QUARRIED
7	GRAVEL DRAIN
8	COBBLES & BOULDERS

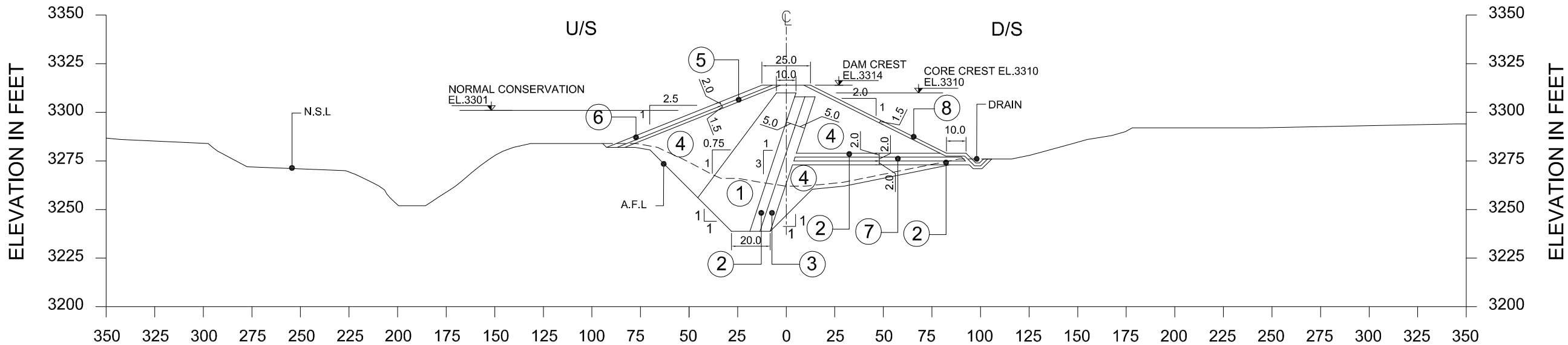

NOTES:-

1. **ALL DIMENSIONS ARE IN FEET**
2. **FOR LOCATION REF. DWG. NO. BQB-SDP-MD-26**
3. **DAM CORE SHOULD BE PLACED ON SOUND ROCK OR AS DIRECTED BY ENGINEER AT SITE**
4. **FILTER MATERIAL WILL REQUIRED PROCESSING /SCREENING FROM SUITABLE AVAILABLE MATERIAL AT SITE**

0 60 120 180 FEET

SCALE: 1"=60 Feet

SMALL DAMS ORGANIZATION GOVERNMENT OF KHYBER PAKHTUNKHWA	BARQAAB CONSULTING SERVICES (PVT)LIMITED LAHORE	SANAM DAM PROJECT LOWER DIR		DRAWN	IMTIAZ
				CHECKED	TANVIR ABBAS
				SUBMITTED	TANVIR ABBAS
			REV. DATE DESCRIPTION	APPROVED	M.T.A

MAIN EMBANKMENT X-SECTION AT RD 0+300

DATE: April, 2018

DRAWING NO. **BQB-SDP-MD-33**

EMBANKMENT MATERIALS

ZONE	MATERIAL
1	SILTY CLAY
2	FINE SAND FILTER
3	COARSE SAND FILTER
4	SANDY GRAVEL FILL
5	BEDDING FOR RIP RAP - WASHED GRAVEL
6	RIP RAP - SELECTED QUARRIED
7	GRAVEL DRAIN
8	COBBLES & BOULDERS

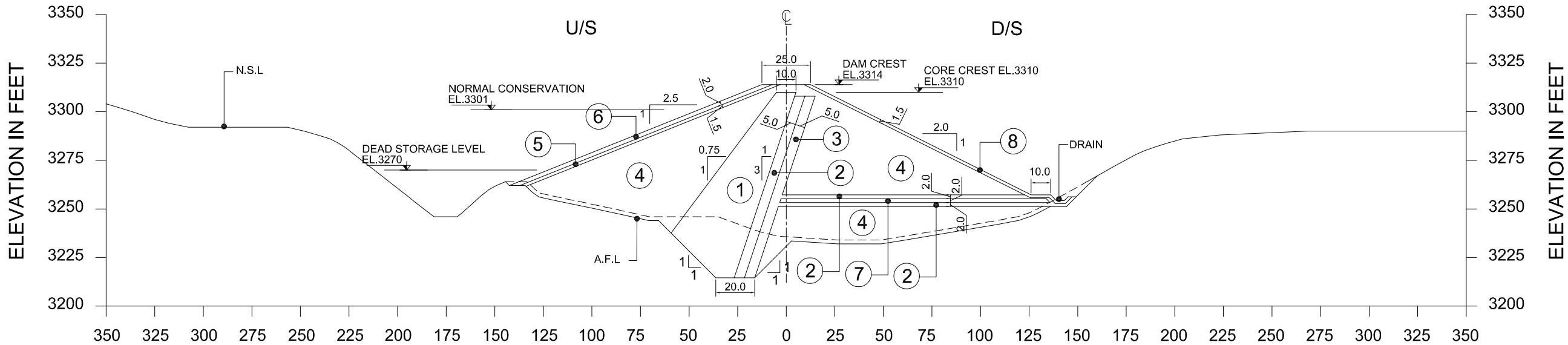

NOTES:-

1. **ALL DIMENSIONS ARE IN FEET**
2. **FOR LOCATION REF. DWG. NO. BQB-SDP-MD-26**
3. **DAM CORE SHOULD BE PLACED ON SOUND ROCK OR AS DIRECTED BY ENGINEER AT SITE**
4. **FILTER MATERIAL WILL REQUIRED PROCESSING /SCREENING FROM SUITABLE AVAILABLE MATERIAL AT SITE**

0 60 120 180 FEET

SCALE: 1"=60 Feet

SMALL DAMS ORGANIZATION GOVERNMENT OF KHYBER PAKHTUNKHWA	BARQAAB CONSULTING SERVICES (PVT)LIMITED LAHORE	SANAM DAM PROJECT LOWER DIR	REV.	DATE	DESCRIPTION	DRAWN: IMTIAZ CHECKED: TANVIR ABBAS SUBMITTED: TANVIR ABBAS APPROVED: M.T.A	**MAIN EMBANKMENT X-SECTION AT RD 0+350** DATE: April, 2018 DRAWING NO. **BQB-SDP-MD-34**

EMBANKMENT MATERIALS

ZONE	MATERIAL
1	SILTY CLAY
2	FINE SAND FILTER
3	COARSE SAND FILTER
4	SANDY GRAVEL FILL
5	BEDDING FOR RIP RAP - WASHED GRAVEL
6	RIP RAP - SELECTED QUARRIED
7	GRAVEL DRAIN
8	COBBLES & BOULDERS

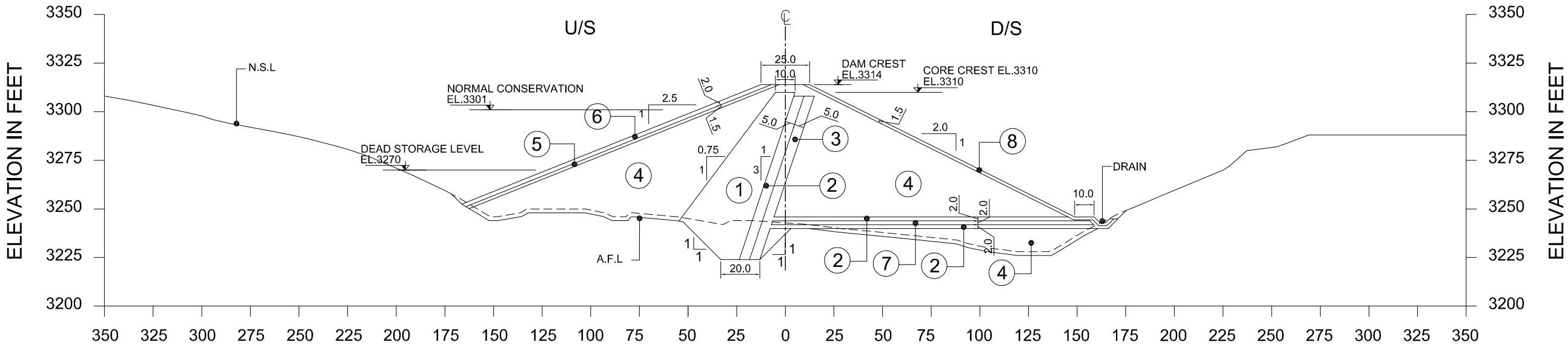

NOTES:-

1. **ALL DIMENSIONS ARE IN FEET**
2. **FOR LOCATION REF. DWG. NO. BQB-SDP-MD-26**
3. **DAM CORE SHOULD BE PLACED ON SOUND ROCK OR AS DIRECTED BY ENGINEER AT SITE**
4. **FILTER MATERIAL WILL REQUIRED PROCESSING /SCREENING FROM SUITABLE AVAILABLE MATERIAL AT SITE**

0 60 120 180 FEET

SCALE: 1"=60 Feet

SMALL DAMS ORGANIZATION GOVERNMENT OF KHYBER PAKHTUNKHWA	BARQAAB CONSULTING SERVICES (PVT)LIMITED LAHORE	SANAM DAM PROJECT LOWER DIR			DRAWN	IMTIAZ
					CHECKED	TANVIR ABBAS
					SUBMITTED	TANVIR ABBAS
			REV.	DATE	APPROVED	M.T.A

MAIN EMBANKMENT X-SECTION AT RD 0+400

DATE: April, 2018

DRAWING NO. **BQB-SDP-MD-35**

EMBANKMENT MATERIALS

ZONE	MATERIAL
1	SILTY CLAY
2	FINE SAND FILTER
3	COARSE SAND FILTER
4	SANDY GRAVEL FILL
5	BEDDING FOR RIP RAP - WASHED GRAVEL
6	RIP RAP - SELECTED QUARRIED
7	GRAVEL DRAIN
8	COBBLES & BOULDERS

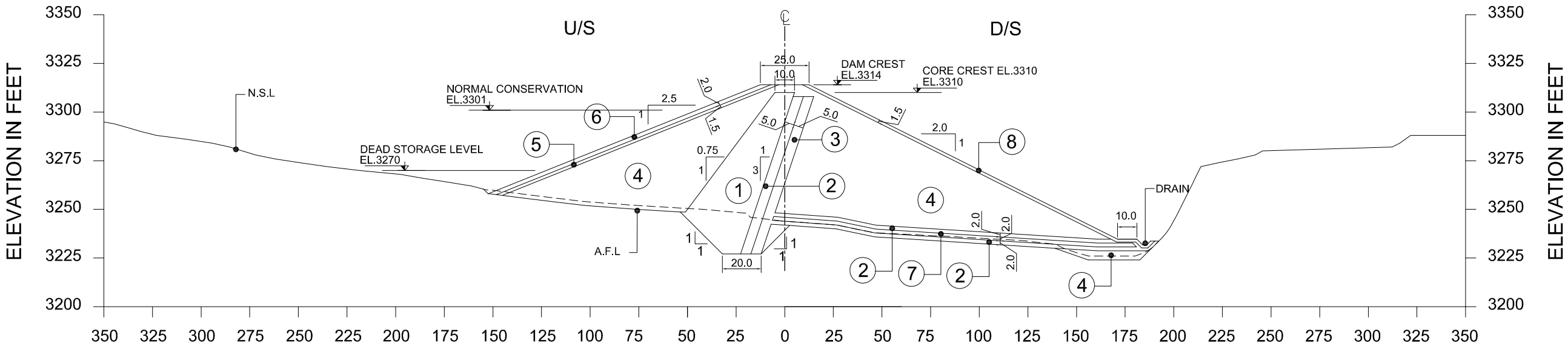

NOTES:-

1. **ALL DIMENSIONS ARE IN FEET**
2. **FOR LOCATION REF. DWG. NO. BQB-SDP-MD-26**
3. **DAM CORE SHOULD BE PLACED ON SOUND ROCK OR AS DIRECTED BY ENGINEER AT SITE**
4. **FILTER MATERIAL WILL REQUIRED PROCESSING /SCREENING FROM SUITABLE AVAILABLE MATERIAL AT SITE**

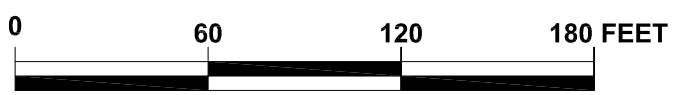

SCALE: 1"=60 Feet

SMALL DAMS ORGANIZATION GOVERNMENT OF KHYBER PAKHTUNKHWA	BARQAAB CONSULTING SERVICES (PVT)LIMITED LAHORE	SANAM DAM PROJECT LOWER DIR		DRAWN	IMTIAZ
				CHECKED	TANVIR ABBAS
				SUBMITTED	TANVIR ABBAS
			REV. DATE DESCRIPTION	APPROVED	M.T.A

MAIN EMBANKMENT X-SECTION AT RD 0+450

DATE: April, 2018

DRAWING NO. **BQB-SDP-MD-36**

EMBANKMENT MATERIALS

ZONE	MATERIAL
1	SILTY CLAY
2	FINE SAND FILTER
3	COARSE SAND FILTER
4	SANDY GRAVEL FILL
5	BEDDING FOR RIP RAP - WASHED GRAVEL
6	RIP RAP - SELECTED QUARRIED
7	GRAVEL DRAIN
8	COBBLES & BOULDERS

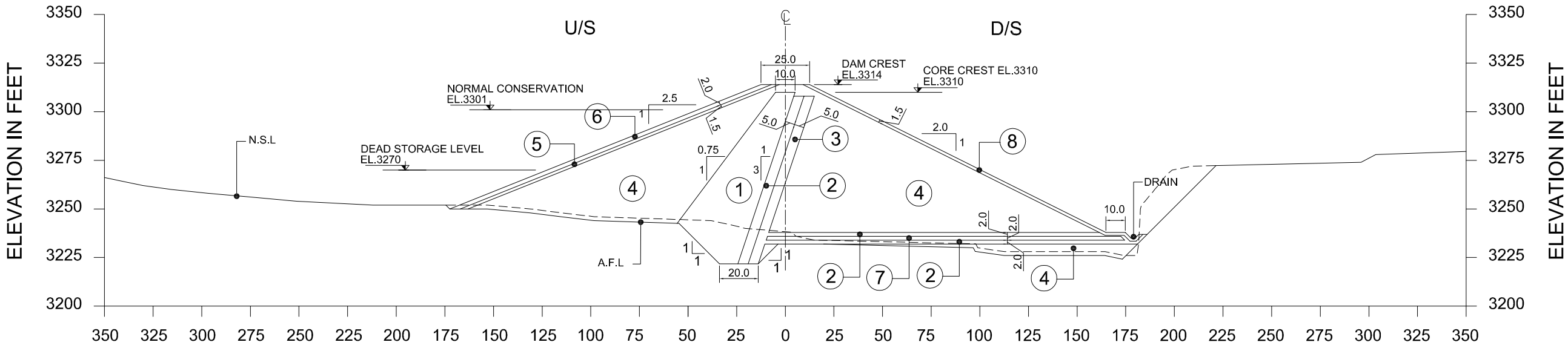

NOTES:-

1. **ALL DIMENSIONS ARE IN FEET**
2. **FOR LOCATION REF. DWG. NO. BQB-SDP-MD-26**
3. **DAM CORE SHOULD BE PLACED ON SOUND ROCK OR AS DIRECTED BY ENGINEER AT SITE**
4. **FILTER MATERIAL WILL REQUIRED PROCESSING /SCREENING FROM SUITABLE AVAILABLE MATERIAL AT SITE**

0 60 120 180 FEET

SCALE: 1"=60 Feet

SMALL DAMS ORGANIZATION GOVERNMENT OF KHYBER PAKHTUNKHWA	BARQAAB CONSULTING SERVICES (PVT)LIMITED LAHORE	SANAM DAM PROJECT LOWER DIR	REV.	DATE	DESCRIPTION	DRAWN: IMTIAZ CHECKED: TANVIR ABBAS SUBMITTED: TANVIR ABBAS APPROVED: M.T.A	**MAIN EMBANKMENT X-SECTION AT RD 0+500** DATE: April, 2018 DRAWING NO. **BQB-SDP-MD-37**

EMBANKMENT MATERIALS

ZONE	MATERIAL
1	SILTY CLAY
2	FINE SAND FILTER
3	COARSE SAND FILTER
4	SANDY GRAVEL FILL
5	BEDDING FOR RIP RAP - WASHED GRAVEL
6	RIP RAP - SELECTED QUARRIED
7	GRAVEL DRAIN
8	COBBLES & BOULDERS

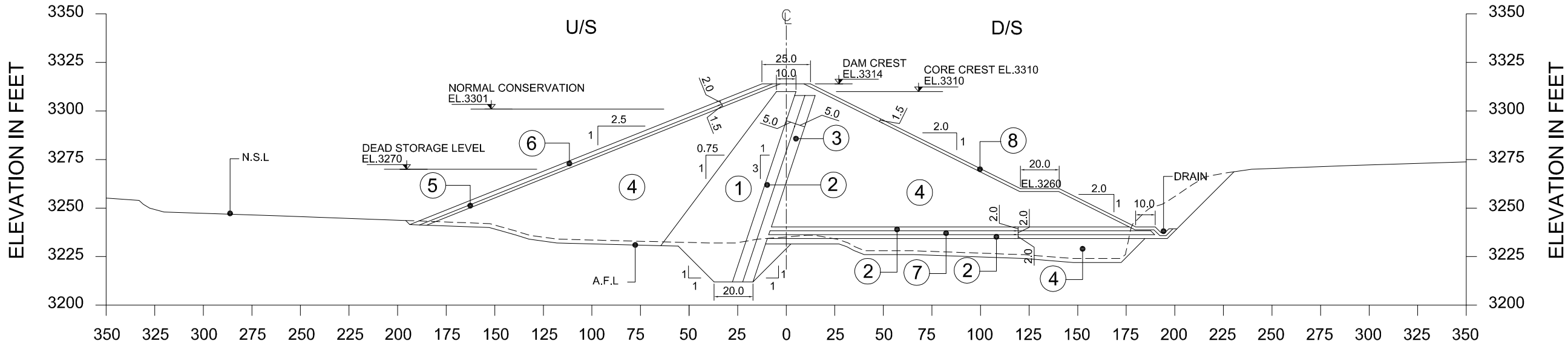

NOTES:-

1. **ALL DIMENSIONS ARE IN FEET**
2. **FOR LOCATION REF. DWG. NO. BQB-SDP-MD-26**
3. **DAM CORE SHOULD BE PLACED ON SOUND ROCK OR AS DIRECTED BY ENGINEER AT SITE**
4. **FILTER MATERIAL WILL REQUIRED PROCESSING /SCREENING FROM SUITABLE AVAILABLE MATERIAL AT SITE**

0 60 120 180 FEET

SCALE: 1"=60 Feet

SMALL DAMS ORGANIZATION GOVERNMENT OF KHYBER PAKHTUNKHWA	BARQAAB CONSULTING SERVICES (PVT)LIMITED LAHORE	SANAM DAM PROJECT LOWER DIR			DRAWN	IMTIAZ	**MAIN EMBANKMENT X-SECTION AT RD 0+550**
					CHECKED	TANVIR ABBAS	
					SUBMITTED	TANVIR ABBAS	DATE: April, 2018 / DRAWING NO. **BQB-SDP-MD-38**
			REV.	DATE	APPROVED	M.T.A	

EMBANKMENT MATERIALS

ZONE	MATERIAL
1	SILTY CLAY
2	FINE SAND FILTER
3	COARSE SAND FILTER
4	SANDY GRAVEL FILL
5	BEDDING FOR RIP RAP - WASHED GRAVEL
6	RIP RAP - SELECTED QUARRIED
7	GRAVEL DRAIN
8	COBBLES & BOULDERS

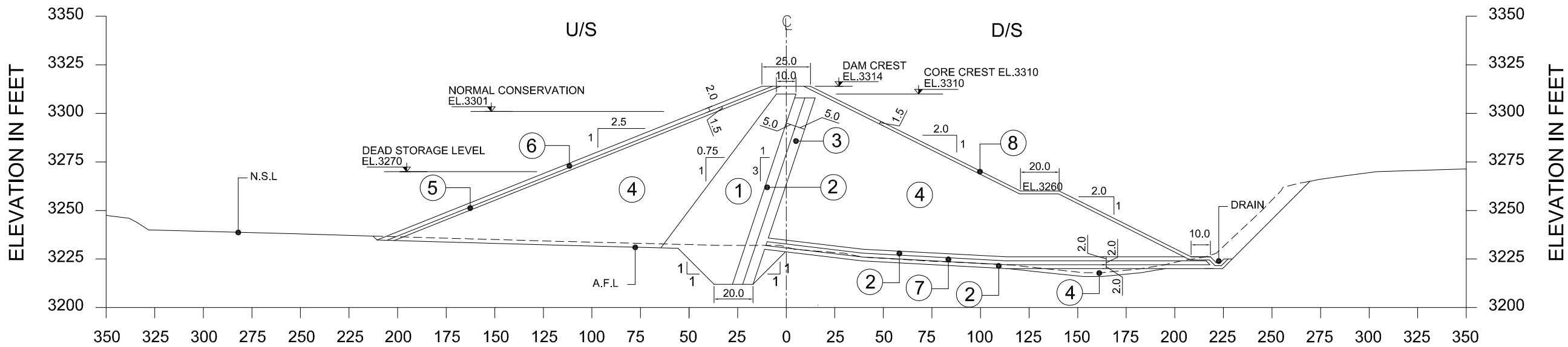

NOTES:-

1. **ALL DIMENSIONS ARE IN FEET**
2. **FOR LOCATION REF. DWG. NO. BQB-SDP-MD-26**
3. **DAM CORE SHOULD BE PLACED ON SOUND ROCK OR AS DIRECTED BY ENGINEER AT SITE**
4. **FILTER MATERIAL WILL REQUIRED PROCESSING /SCREENING FROM SUITABLE AVAILABLE MATERIAL AT SITE**

0 60 120 180 FEET

SCALE: 1"=60 Feet

SMALL DAMS ORGANIZATION GOVERNMENT OF KHYBER PAKHTUNKHWA	BARQAAB CONSULTING SERVICES (PVT)LIMITED LAHORE	SANAM DAM PROJECT LOWER DIR			DRAWN	IMTIAZ
					CHECKED	TANVIR ABBAS
					SUBMITTED	TANVIR ABBAS
			REV.	DATE	DESCRIPTION	APPROVED	M.T.A

MAIN EMBANKMENT X-SECTION AT RD 0+600

DATE: April, 2018

DRAWING NO. **BQB-SDP-MD-39**

EMBANKMENT MATERIALS

ZONE	MATERIAL
1	SILTY CLAY
2	FINE SAND FILTER
3	COARSE SAND FILTER
4	SANDY GRAVEL FILL
5	BEDDING FOR RIP RAP - WASHED GRAVEL
6	RIP RAP - SELECTED QUARRIED
7	GRAVEL DRAIN
8	COBBLES & BOULDERS

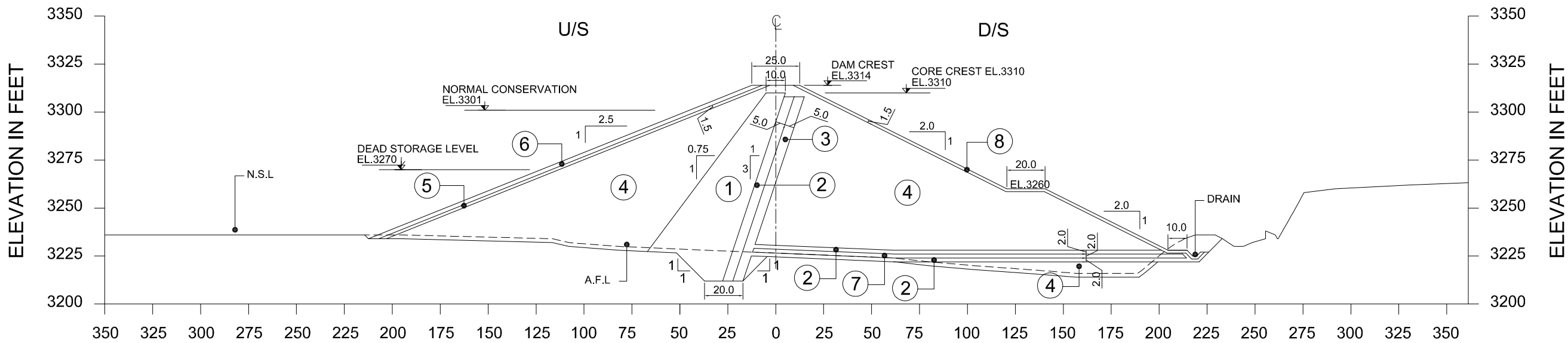

NOTES:-

1. **ALL DIMENSIONS ARE IN FEET**
2. **FOR LOCATION REF. DWG. NO. BQB-SDP-MD-26**
3. **DAM CORE SHOULD BE PLACED ON SOUND ROCK OR AS DIRECTED BY ENGINEER AT SITE**
4. **FILTER MATERIAL WILL REQUIRED PROCESSING /SCREENING FROM SUITABLE AVAILABLE MATERIAL AT SITE**

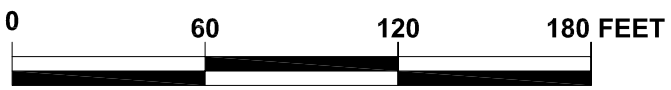

SCALE: 1"=60 Feet

SMALL DAMS ORGANIZATION GOVERNMENT OF KHYBER PAKHTUNKHWA	BARQAAB CONSULTING SERVICES (PVT)LIMITED LAHORE	SANAM DAM PROJECT LOWER DIR			DRAWN	IMTIAZ	**MAIN EMBANKMENT X-SECTION AT RD 0+650**
					CHECKED	TANVIR ABBAS	
					SUBMITTED	TANVIR ABBAS	DATE: April, 2018 / DRAWING NO. **BQB-SDP-MD-40**
			REV.	DATE	APPROVED	M.T.A	
				DESCRIPTION			

EMBANKMENT MATERIALS

ZONE	MATERIAL
1	SILTY CLAY
2	FINE SAND FILTER
3	COARSE SAND FILTER
4	SANDY GRAVEL FILL
5	BEDDING FOR RIP RAP - WASHED GRAVEL
6	RIP RAP - SELECTED QUARRIED
7	GRAVEL DRAIN
8	COBBLES & BOULDERS

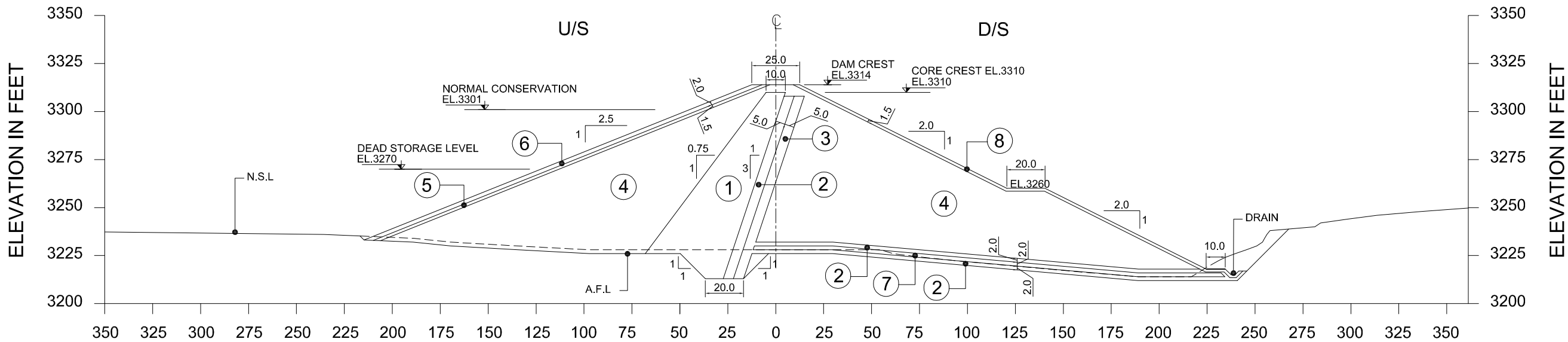

NOTES:-

1. **ALL DIMENSIONS ARE IN FEET**
2. **FOR LOCATION REF. DWG. NO. BQB-SDP-MD-26**
3. **DAM CORE SHOULD BE PLACED ON SOUND ROCK OR AS DIRECTED BY ENGINEER AT SITE**
4. **FILTER MATERIAL WILL REQUIRED PROCESSING /SCREENING FROM SUITABLE AVAILABLE MATERIAL AT SITE**

0 60 120 180 FEET

SCALE: 1"=60 Feet

SMALL DAMS ORGANIZATION GOVERNMENT OF KHYBER PAKHTUNKHWA	BARQAAB CONSULTING SERVICES (PVT)LIMITED LAHORE	SANAM DAM PROJECT LOWER DIR			DRAWN	IMTIAZ	**MAIN EMBANKMENT X-SECTION AT RD 0+700**
					CHECKED	TANVIR ABBAS	
					SUBMITTED	TANVIR ABBAS	DATE: April, 2018 / DRAWING NO. **BQB-SDP-MD-41**
			REV.	DATE	APPROVED	M.T.A	
				DESCRIPTION			

EMBANKMENT MATERIALS

ZONE	MATERIAL
1	SILTY CLAY
2	FINE SAND FILTER
3	COARSE SAND FILTER
4	SANDY GRAVEL FILL
5	BEDDING FOR RIP RAP - WASHED GRAVEL
6	RIP RAP - SELECTED QUARRIED
7	GRAVEL DRAIN
8	COBBLES & BOULDERS

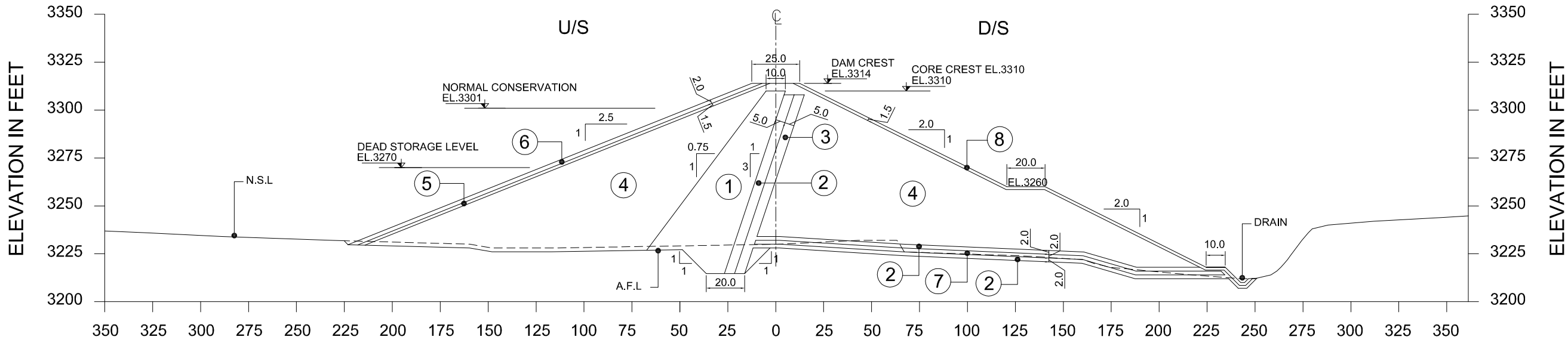

NOTES:-

1. **ALL DIMENSIONS ARE IN FEET**
2. **FOR LOCATION REF. DWG. NO. BQB-SDP-MD-26**
3. **DAM CORE SHOULD BE PLACED ON SOUND ROCK OR AS DIRECTED BY ENGINEER AT SITE**
4. **FILTER MATERIAL WILL REQUIRED PROCESSING /SCREENING FROM SUITABLE AVAILABLE MATERIAL AT SITE**

SCALE: 1"=60 Feet

SMALL DAMS ORGANIZATION GOVERNMENT OF KHYBER PAKHTUNKHWA	BARQAAB CONSULTING SERVICES (PVT)LIMITED LAHORE	SANAM DAM PROJECT LOWER DIR			DRAWN	IMTIAZ	**MAIN EMBANKMENT X-SECTION AT RD 0+750**
					CHECKED	TANVIR ABBAS	
					SUBMITTED	TANVIR ABBAS	DATE: April, 2018 / DRAWING NO. **BQB-SDP-MD-42**
			REV.	DATE	APPROVED	M.T.A	

EMBANKMENT MATERIALS

ZONE	MATERIAL
1	SILTY CLAY
2	FINE SAND FILTER
3	COARSE SAND FILTER
4	SANDY GRAVEL FILL
5	BEDDING FOR RIP RAP - WASHED GRAVEL
6	RIP RAP - SELECTED QUARRIED
7	GRAVEL DRAIN
8	COBBLES & BOULDERS

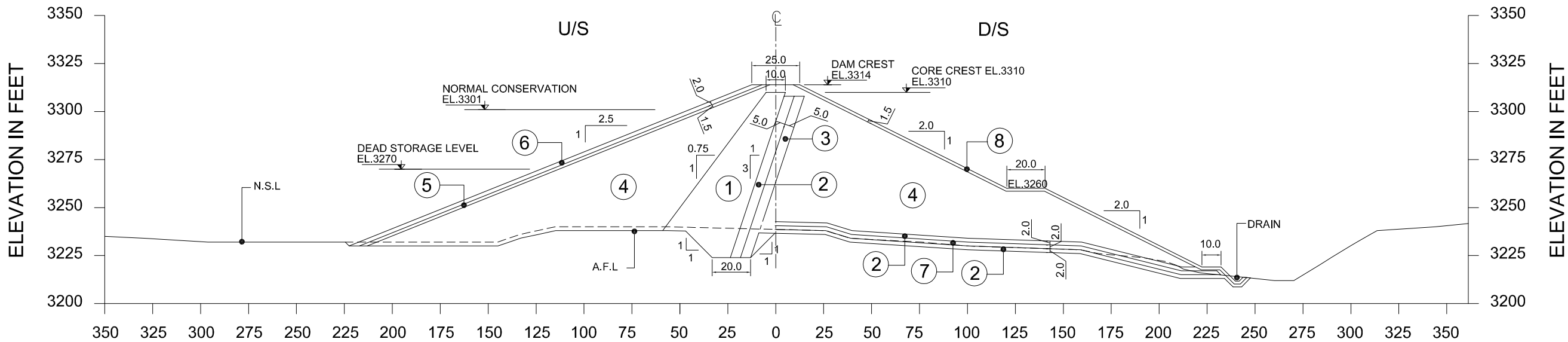

NOTES:-

1. **ALL DIMENSIONS ARE IN FEET**
2. **FOR LOCATION REF. DWG. NO. BQB-SDP-MD-26**
3. **DAM CORE SHOULD BE PLACED ON SOUND ROCK OR AS DIRECTED BY ENGINEER AT SITE**
4. **FILTER MATERIAL WILL REQUIRED PROCESSING /SCREENING FROM SUITABLE AVAILABLE MATERIAL AT SITE**

0 60 120 180 FEET

SCALE: 1"=60 Feet

SMALL DAMS ORGANIZATION GOVERNMENT OF KHYBER PAKHTUNKHWA	BARQAAB CONSULTING SERVICES (PVT)LIMITED LAHORE	SANAM DAM PROJECT LOWER DIR			DRAWN	IMTIAZ	**MAIN EMBANKMENT X-SECTION AT RD 0+800**
					CHECKED	TANVIR ABBAS	
					SUBMITTED	TANVIR ABBAS	DATE: April, 2018 / DRAWING NO. **BQB-SDP-MD-43**
			REV.	DATE	APPROVED	M.T.A	
				DESCRIPTION			

EMBANKMENT MATERIALS

ZONE	MATERIAL
1	SILTY CLAY
2	FINE SAND FILTER
3	COARSE SAND FILTER
4	SANDY GRAVEL FILL
5	BEDDING FOR RIP RAP - WASHED GRAVEL
6	RIP RAP - SELECTED QUARRIED
7	GRAVEL DRAIN
8	COBBLES & BOULDERS

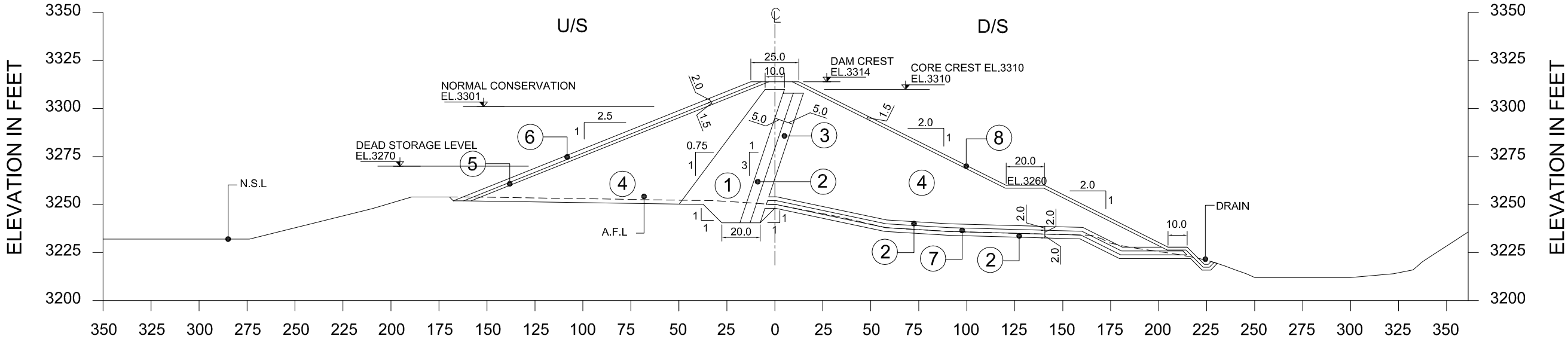

NOTES:-

1. **ALL DIMENSIONS ARE IN FEET**
2. **FOR LOCATION REF. DWG. NO. BQB-SDP-MD-26**
3. **DAM CORE SHOULD BE PLACED ON SOUND ROCK OR AS DIRECTED BY ENGINEER AT SITE**
4. **FILTER MATERIAL WILL REQUIRED PROCESSING /SCREENING FROM SUITABLE AVAILABLE MATERIAL AT SITE**

0 60 120 180 FEET

SCALE: 1"=60 Feet

SMALL DAMS ORGANIZATION GOVERNMENT OF KHYBER PAKHTUNKHWA	BARQAAB CONSULTING SERVICES (PVT)LIMITED LAHORE	SANAM DAM PROJECT LOWER DIR			DRAWN	IMTIAZ	**MAIN EMBANKMENT X-SECTION AT RD 0+850**
					CHECKED	TANVIR ABBAS	
					SUBMITTED	TANVIR ABBAS	DATE: April, 2018 / DRAWING NO. **BQB-SDP-MD-44**
			REV.	DATE	APPROVED	M.T.A	

EMBANKMENT MATERIALS

ZONE	MATERIAL
1	SILTY CLAY
2	FINE SAND FILTER
3	COARSE SAND FILTER
4	SANDY GRAVEL FILL
5	BEDDING FOR RIP RAP - WASHED GRAVEL
6	RIP RAP - SELECTED QUARRIED
7	GRAVEL DRAIN
8	COBBLES & BOULDERS

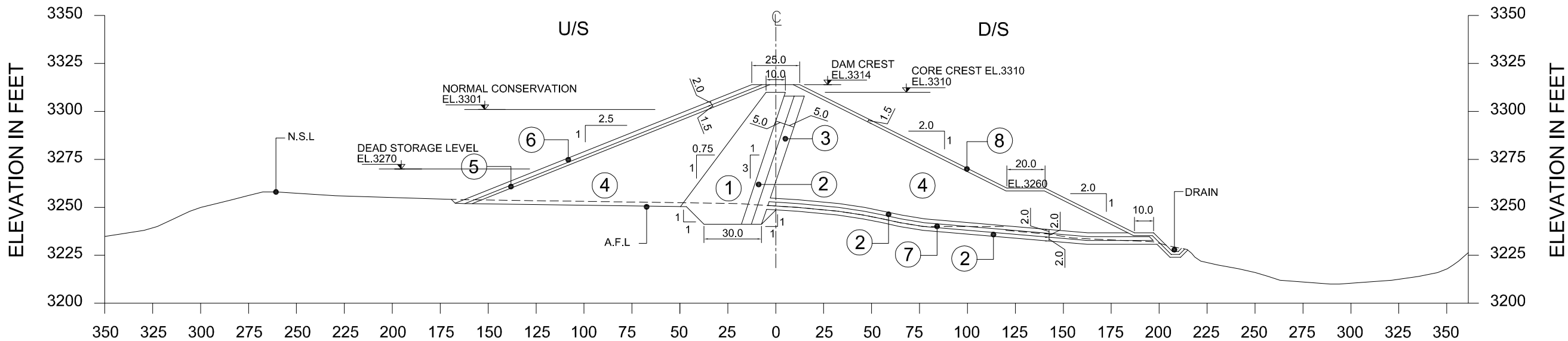

NOTES:-

1. **ALL DIMENSIONS ARE IN FEET**
2. **FOR LOCATION REF. DWG. NO. BQB-SDP-MD-26**
3. **DAM CORE SHOULD BE PLACED ON SOUND ROCK OR AS DIRECTED BY ENGINEER AT SITE**
4. **FILTER MATERIAL WILL REQUIRED PROCESSING /SCREENING FROM SUITABLE AVAILABLE MATERIAL AT SITE**

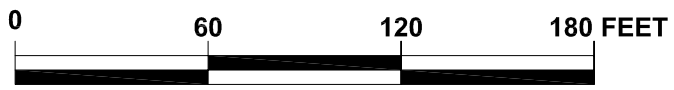

SCALE: 1"=60 Feet

SMALL DAMS ORGANIZATION GOVERNMENT OF KHYBER PAKHTUNKHWA	BARQAAB CONSULTING SERVICES (PVT)LIMITED LAHORE	SANAM DAM PROJECT LOWER DIR	DRAWN	IMTIAZ	**MAIN EMBANKMENT X-SECTION AT RD 0+870**
			CHECKED	TANVIR ABBAS	
			SUBMITTED	TANVIR ABBAS	DATE: April, 2018 / DRAWING NO. **BQB-SDP-MD-45**
		REV. / DATE / DESCRIPTION	APPROVED	M.T.A	

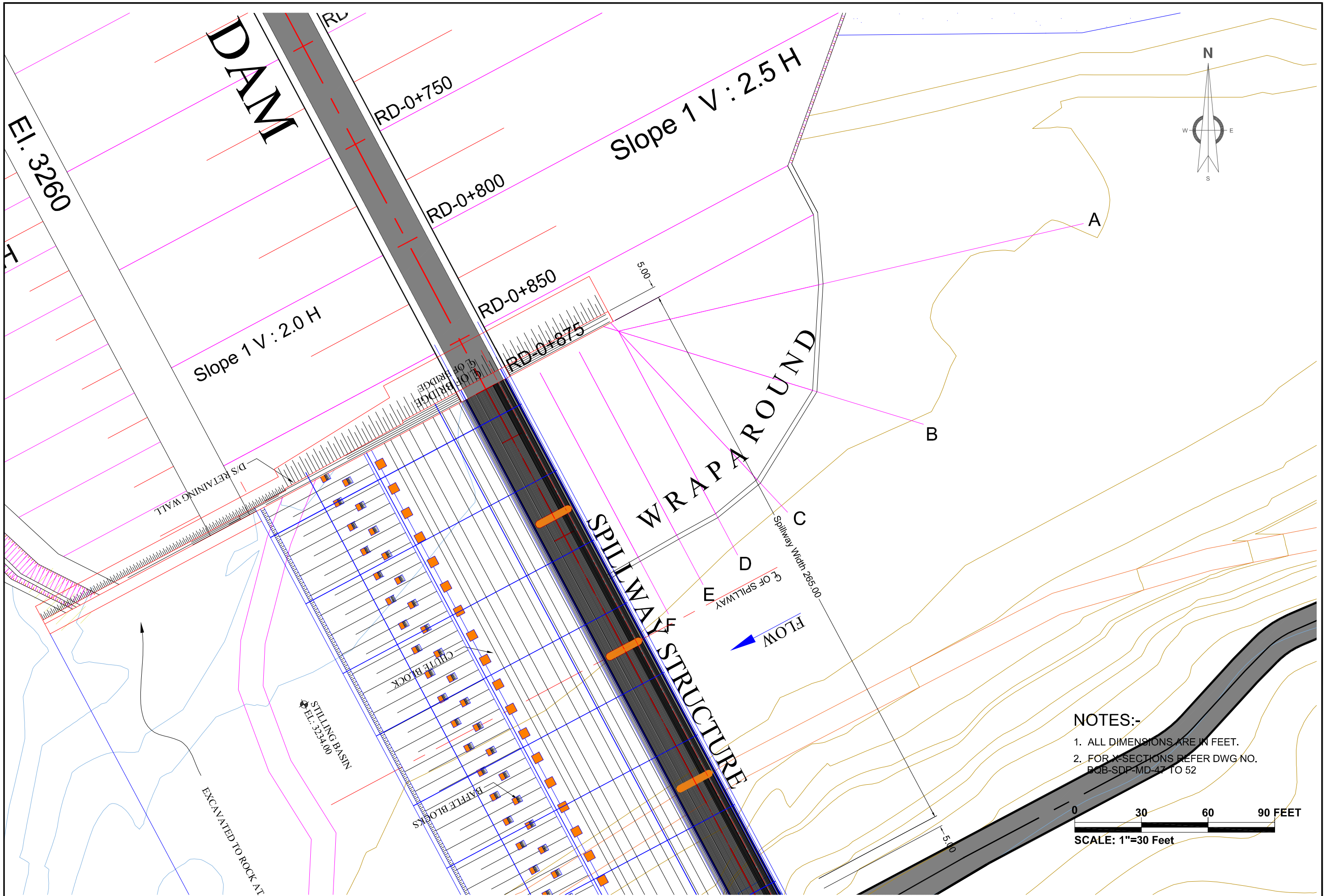

SMALL DAMS ORGANIZATION
GOVERNMENT OF KHYBER PAKHTUNKHWA

BARQAAB CONSULTING SERVICES
(PVT)LIMITED LAHORE

SANAM DAM PROJECT
LOWER DIR

REV.	DATE	DESCRIPTION

DRAWN	IMTIAZ
CHECKED	TANVIR ABBAS
SUBMITTED	TANVIR ABBAS
APPROVED	M.T.A

EMBANKMENT DAM WRAPAROUND PLAN

DATE: April, 2018

DRAWING NO. **BQB-SDP-MD-46**

EMBANKMENT MATERIALS

ZONE	MATERIAL
1	SILTY CLAY
2	FINE SAND FILTER
3	COARSE SAND FILTER
4	SANDY GRAVEL FILL
5	BEDDING FOR RIP RAP - WASHED GRAVEL
6	RIP RAP - SELECTED QUARRIED
7	GRAVEL DRAIN
8	COBBLES & BOULDERS

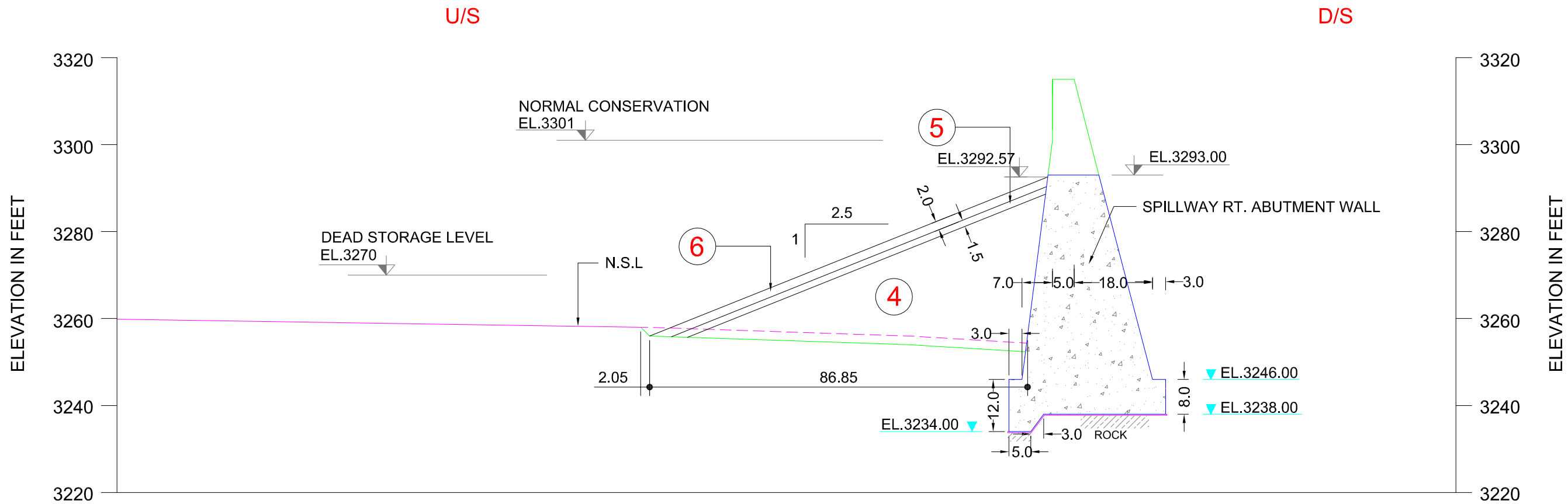

NOTES:-

1. **ALL DIMENSIONS ARE IN FEET**
2. **FOR LOCATION REF. DWG. NO. BQB-SDP-MD-46**
3. **DAM CORE SHOULD BE PLACED ON SOUND ROCK OR AS DIRECTED BY ENGINEER AT SITE**
4. **FILTER MATERIAL WILL REQUIRED PROCESSING /SCREENING FROM SUITABLE AVAILABLE MATERIAL AT SITE**

0 20 40 60 FEET

SCALE: 1"=20 Feet

SMALL DAMS ORGANIZATION GOVERNMENT OF KHYBER PAKHTUNKHWA	BARQAAB CONSULTING SERVICES (PVT)LIMITED LAHORE	SANAM DAM PROJECT LOWER DIR	REV. / DATE / DESCRIPTION	DRAWN: IMTIAZ CHECKED: TANVIR ABBAS SUBMITTED: TANVIR ABBAS APPROVED: M.T.A	**MAIN EMBANKMENT WRAPAROUND SECTION-A** DATE: April, 2018	DRAWING NO. **BQB-SDP-MD-47**

EMBANKMENT MATERIALS

ZONE	MATERIAL
1	SILTY CLAY
2	FINE SAND FILTER
3	COARSE SAND FILTER
4	SANDY GRAVEL FILL
5	BEDDING FOR RIP RAP - WASHED GRAVEL
6	RIP RAP - SELECTED QUARRIED
7	GRAVEL DRAIN
8	COBBLES & BOULDERS

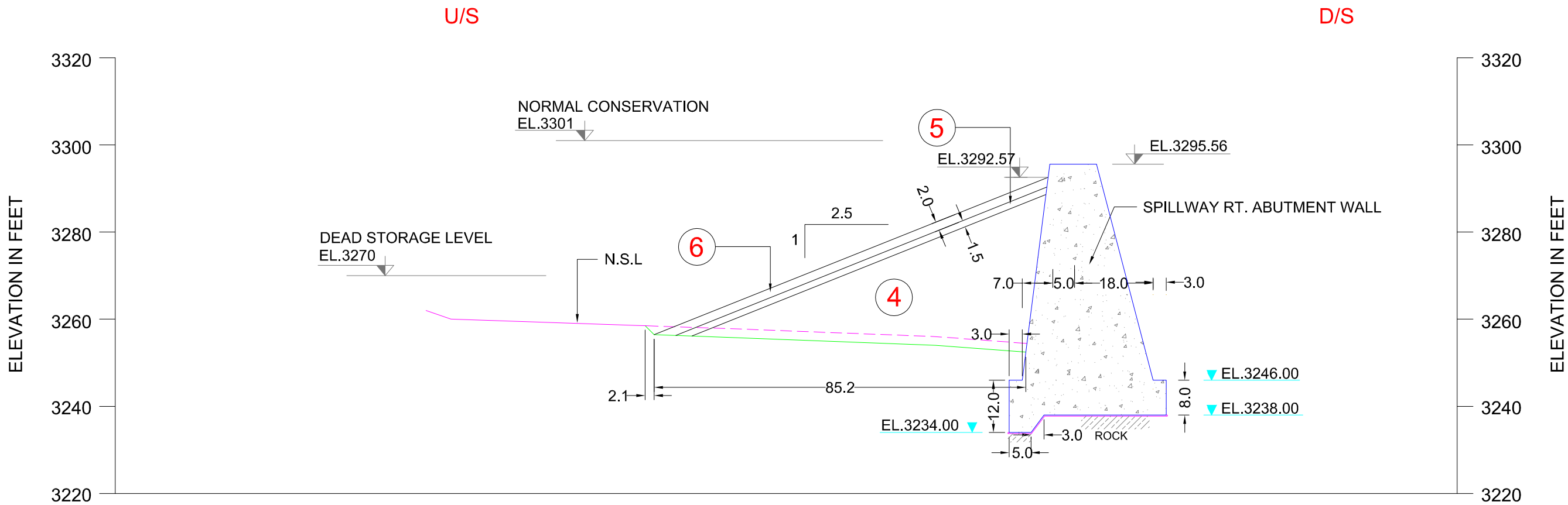

NOTES:-

1. **ALL DIMENSIONS ARE IN FEET**
2. **FOR LOCATION REF. DWG. NO. BQB-SDP-MD-46**
3. **DAM CORE SHOULD BE PLACED ON SOUND ROCK OR AS DIRECTED BY ENGINEER AT SITE**
4. **FILTER MATERIAL WILL REQUIRED PROCESSING /SCREENING FROM SUITABLE AVAILABLE MATERIAL AT SITE**

0 20 40 60 FEET

SCALE: 1"=20 Feet

SMALL DAMS ORGANIZATION GOVERNMENT OF KHYBER PAKHTUNKHWA	BARQAAB CONSULTING SERVICES (PVT)LIMITED LAHORE	SANAM DAM PROJECT LOWER DIR			DRAWN	IMTIAZ
					CHECKED	TANVIR ABBAS
					SUBMITTED	TANVIR ABBAS
			REV.	DATE	DESCRIPTION	APPROVED	M.T.A

MAIN EMBANKMENT WRAPAROUND SECTION-B

DATE: April, 2018

DRAWING NO. **BQB-SDP-MD-48**

EMBANKMENT MATERIALS

ZONE	MATERIAL
1	SILTY CLAY
2	FINE SAND FILTER
3	COARSE SAND FILTER
4	SANDY GRAVEL FILL
5	BEDDING FOR RIP RAP - WASHED GRAVEL
6	RIP RAP - SELECTED QUARRIED
7	GRAVEL DRAIN
8	COBBLES & BOULDERS

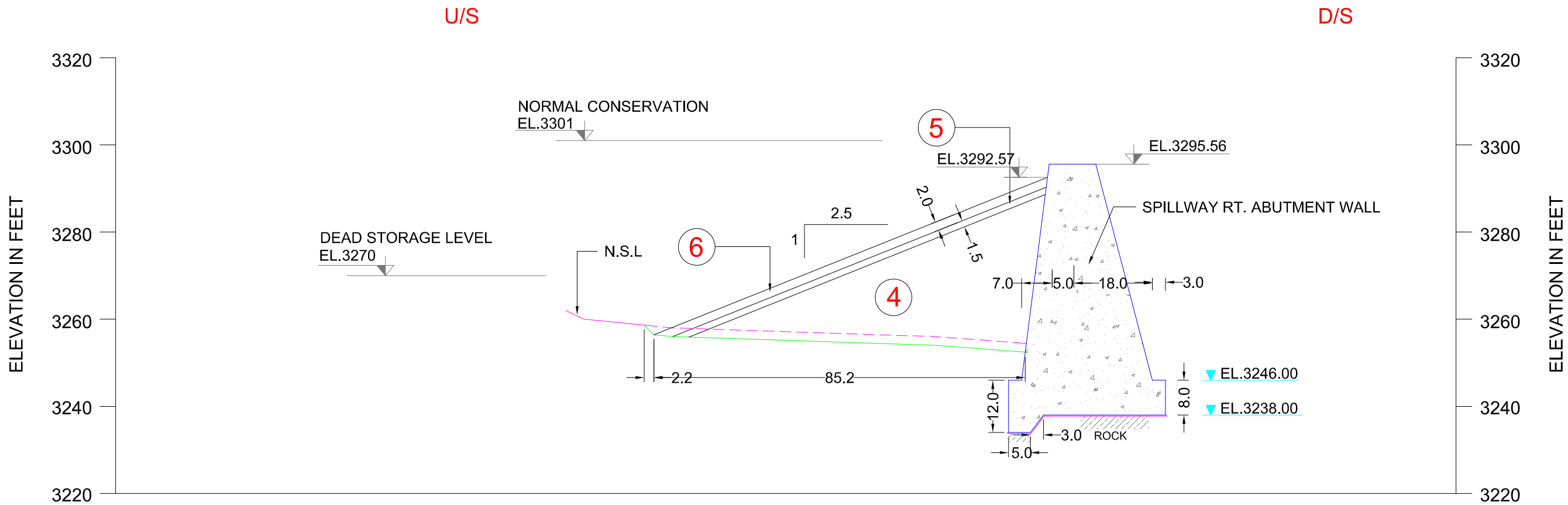

NOTES:-

1. **ALL DIMENSIONS ARE IN FEET**
2. **FOR LOCATION REF. DWG. NO. BQB-SDP-MD-46**
3. **DAM CORE SHOULD BE PLACED ON SOUND ROCK OR AS DIRECTED BY ENGINEER AT SITE**
4. **FILTER MATERIAL WILL REQUIRED PROCESSING /SCREENING FROM SUITABLE AVAILABLE MATERIAL AT SITE**

0 20 40 60 FEET

SCALE: 1"=20 Feet

SMALL DAMS ORGANIZATION GOVERNMENT OF KHYBER PAKHTUNKHWA	BARQAAB CONSULTING SERVICES (PVT)LIMITED LAHORE	SANAM DAM PROJECT LOWER DIR			DRAWN	IMTIAZ	**MAIN EMBANKMENT WRAPAROUND SECTION-C**
					CHECKED	TANVIR ABBAS	
					SUBMITTED	TANVIR ABBAS	DATE: April, 2018 / DRAWING NO. **BQB-SDP-MD-49**
			REV.	DATE	APPROVED	M.T.A	

EMBANKMENT MATERIALS

ZONE	MATERIAL
1	SILTY CLAY
2	FINE SAND FILTER
3	COARSE SAND FILTER
4	SANDY GRAVEL FILL
5	BEDDING FOR RIP RAP - WASHED GRAVEL
6	RIP RAP - SELECTED QUARRIED
7	GRAVEL DRAIN
8	COBBLES & BOULDERS

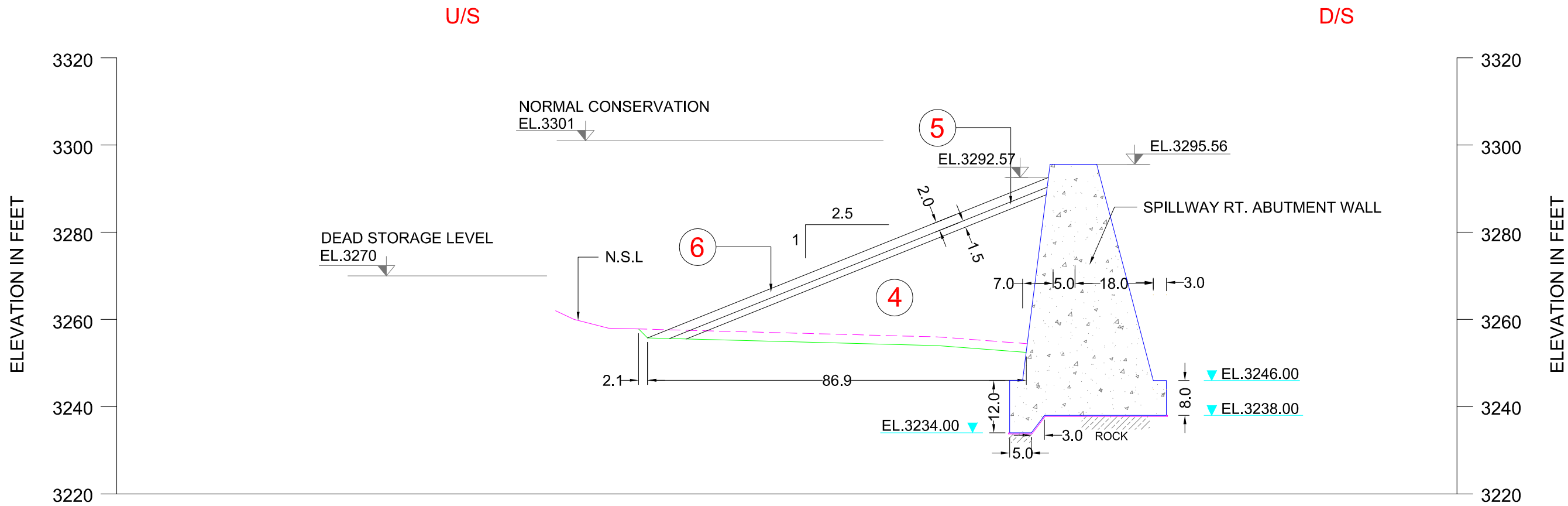

NOTES:-

1. **ALL DIMENSIONS ARE IN FEET**
2. **FOR LOCATION REF. DWG. NO. BQB-SDP-MD-46**
3. **DAM CORE SHOULD BE PLACED ON SOUND ROCK OR AS DIRECTED BY ENGINEER AT SITE**
4. **FILTER MATERIAL WILL REQUIRED PROCESSING /SCREENING FROM SUITABLE AVAILABLE MATERIAL AT SITE**

0 20 40 60 FEET

SCALE: 1"=20 Feet

SMALL DAMS ORGANIZATION GOVERNMENT OF KHYBER PAKHTUNKHWA	BARQAAB CONSULTING SERVICES (PVT)LIMITED LAHORE	SANAM DAM PROJECT LOWER DIR			DRAWN: IMTIAZ CHECKED: TANVIR ABBAS SUBMITTED: TANVIR ABBAS APPROVED: M.T.A	**MAIN EMBANKMENT WRAPAROUND SECTION-D** DATE: April, 2018 DRAWING NO. **BQB-SDP-MD-50**
			REV.	DATE	DESCRIPTION	

EMBANKMENT MATERIALS

ZONE	MATERIAL
1	SILTY CLAY
2	FINE SAND FILTER
3	COARSE SAND FILTER
4	SANDY GRAVEL FILL
5	BEDDING FOR RIP RAP - WASHED GRAVEL
6	RIP RAP - SELECTED QUARRIED
7	GRAVEL DRAIN
8	COBBLES & BOULDERS

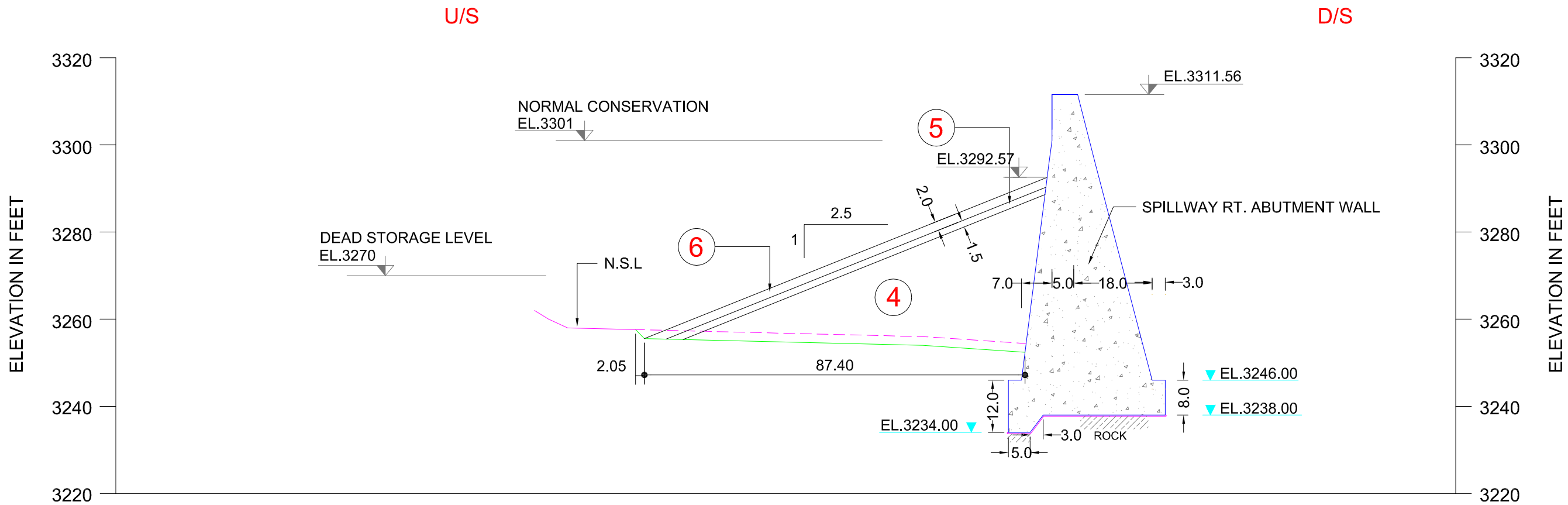

NOTES:-

1. **ALL DIMENSIONS ARE IN FEET**
2. **FOR LOCATION REF. DWG. NO. BQB-SDP-MD-46**
3. **DAM CORE SHOULD BE PLACED ON SOUND ROCK OR AS DIRECTED BY ENGINEER AT SITE**
4. **FILTER MATERIAL WILL REQUIRED PROCESSING /SCREENING FROM SUITABLE AVAILABLE MATERIAL AT SITE**

0 20 40 60 FEET

SCALE: 1"=20 Feet

SMALL DAMS ORGANIZATION GOVERNMENT OF KHYBER PAKHTUNKHWA	BARQAAB CONSULTING SERVICES (PVT)LIMITED LAHORE	SANAM DAM PROJECT LOWER DIR		DRAWN	IMTIAZ	**MAIN EMBANKMENT WRAPAROUND SECTION-E**
				CHECKED	TANVIR ABBAS	
				SUBMITTED	TANVIR ABBAS	DATE: April, 2018 / DRAWING NO. **BQB-SDP-MD-51**
			REV. / DATE / DESCRIPTION	APPROVED	M.T.A	

EMBANKMENT MATERIALS

ZONE	MATERIAL
1	SILTY CLAY
2	FINE SAND FILTER
3	COARSE SAND FILTER
4	SANDY GRAVEL FILL
5	BEDDING FOR RIP RAP - WASHED GRAVEL
6	RIP RAP - SELECTED QUARRIED
7	GRAVEL DRAIN
8	COBBLES & BOULDERS

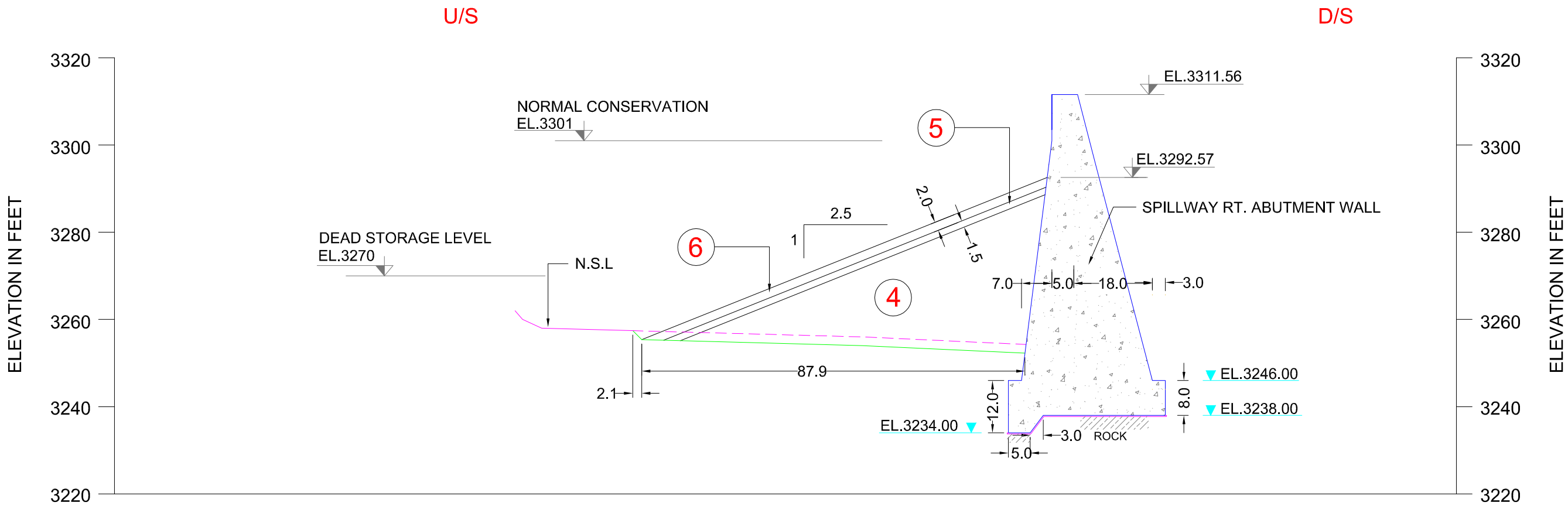

NOTES:-

1. **ALL DIMENSIONS ARE IN FEET**
2. **FOR LOCATION REF. DWG. NO. BQB-SDP-MD-46**
3. **DAM CORE SHOULD BE PLACED ON SOUND ROCK OR AS DIRECTED BY ENGINEER AT SITE**
4. **FILTER MATERIAL WILL REQUIRED PROCESSING /SCREENING FROM SUITABLE AVAILABLE MATERIAL AT SITE**

0 20 40 60 FEET

SCALE: 1"=20 Feet

SMALL DAMS ORGANIZATION GOVERNMENT OF KHYBER PAKHTUNKHWA	BARQAAB CONSULTING SERVICES (PVT)LIMITED LAHORE	SANAM DAM PROJECT LOWER DIR			DRAWN: IMTIAZ CHECKED: TANVIR ABBAS SUBMITTED: TANVIR ABBAS APPROVED: M.T.A	**MAIN EMBANKMENT WRAPAROUND SECTION-F** DATE: April, 2018 DRAWING NO. **BQB-SDP-MD-52**
			REV.	DATE	DESCRIPTION	

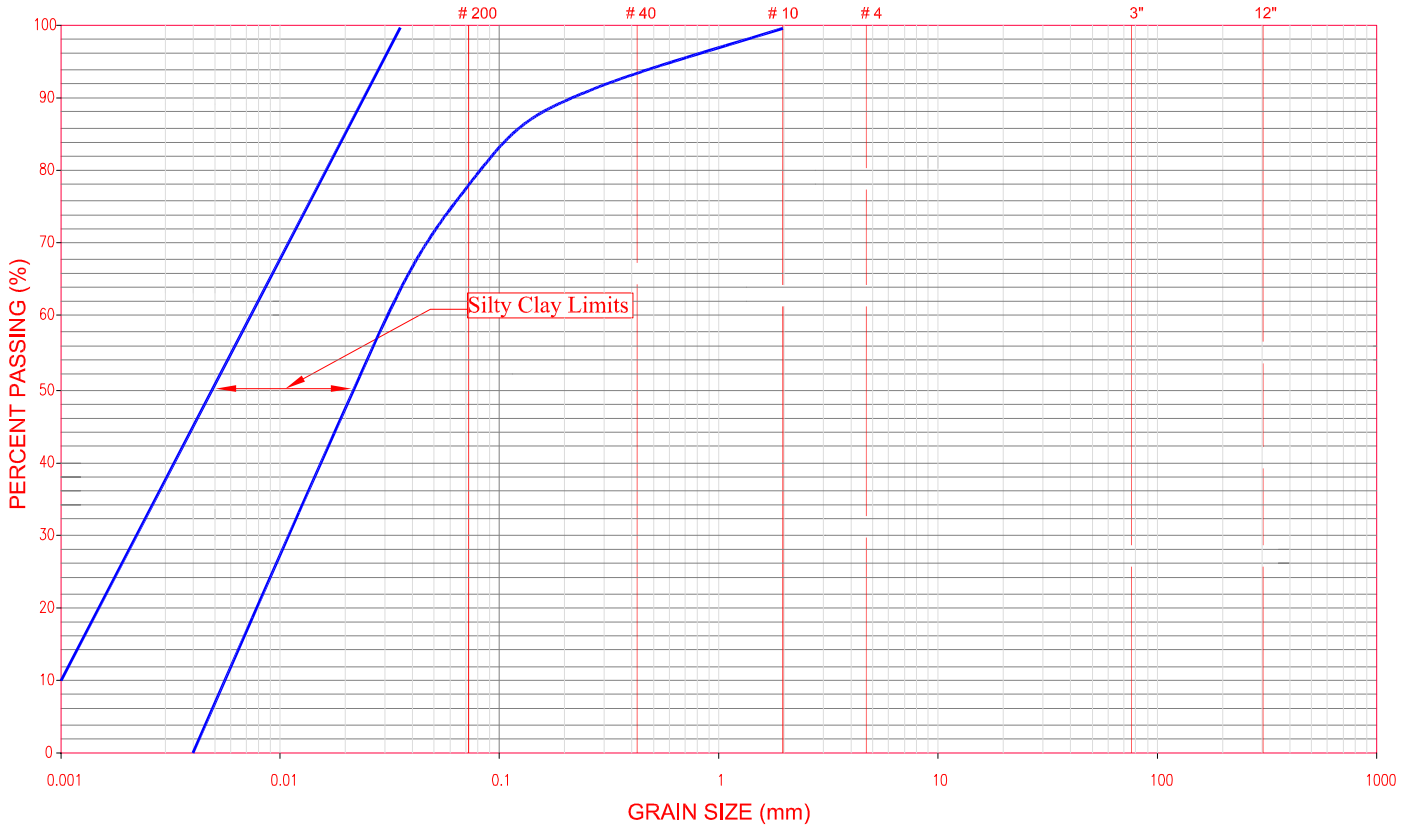

(a) DAM IMPERVIOUS CORE MATERIALS

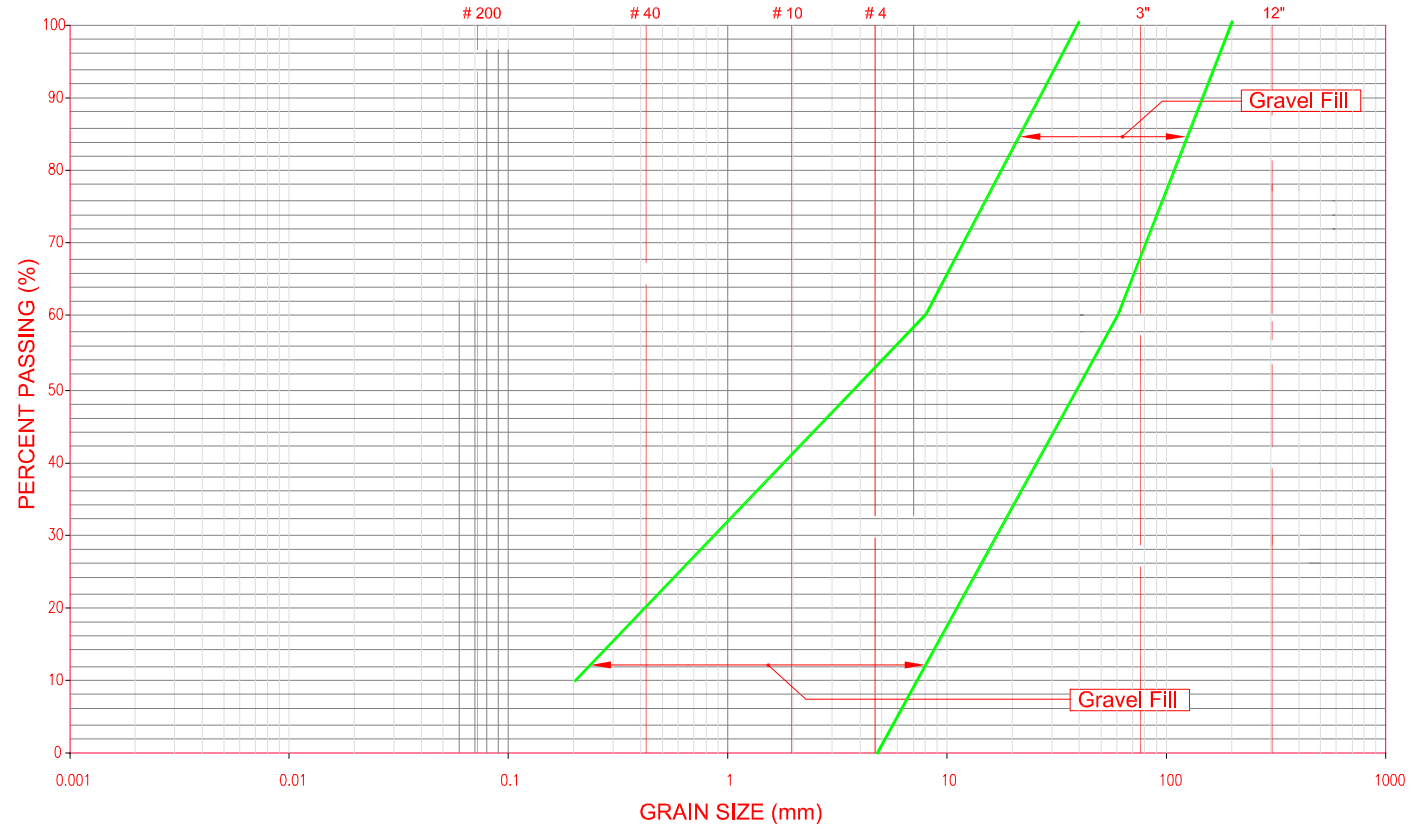

(b) DAM SHOULDER MATERIALS

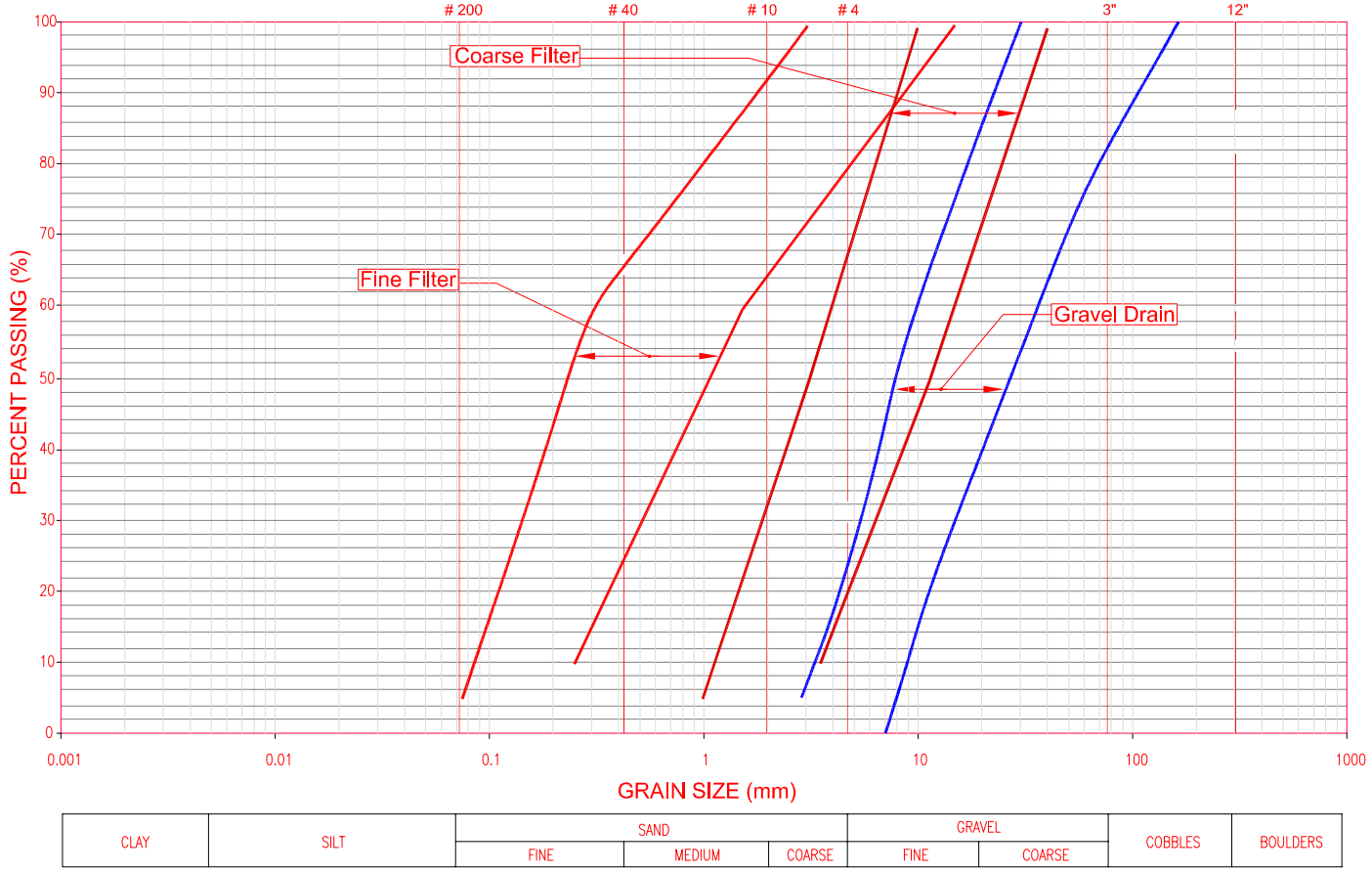

(c) FILTERS AND GRAVEL DRAIN

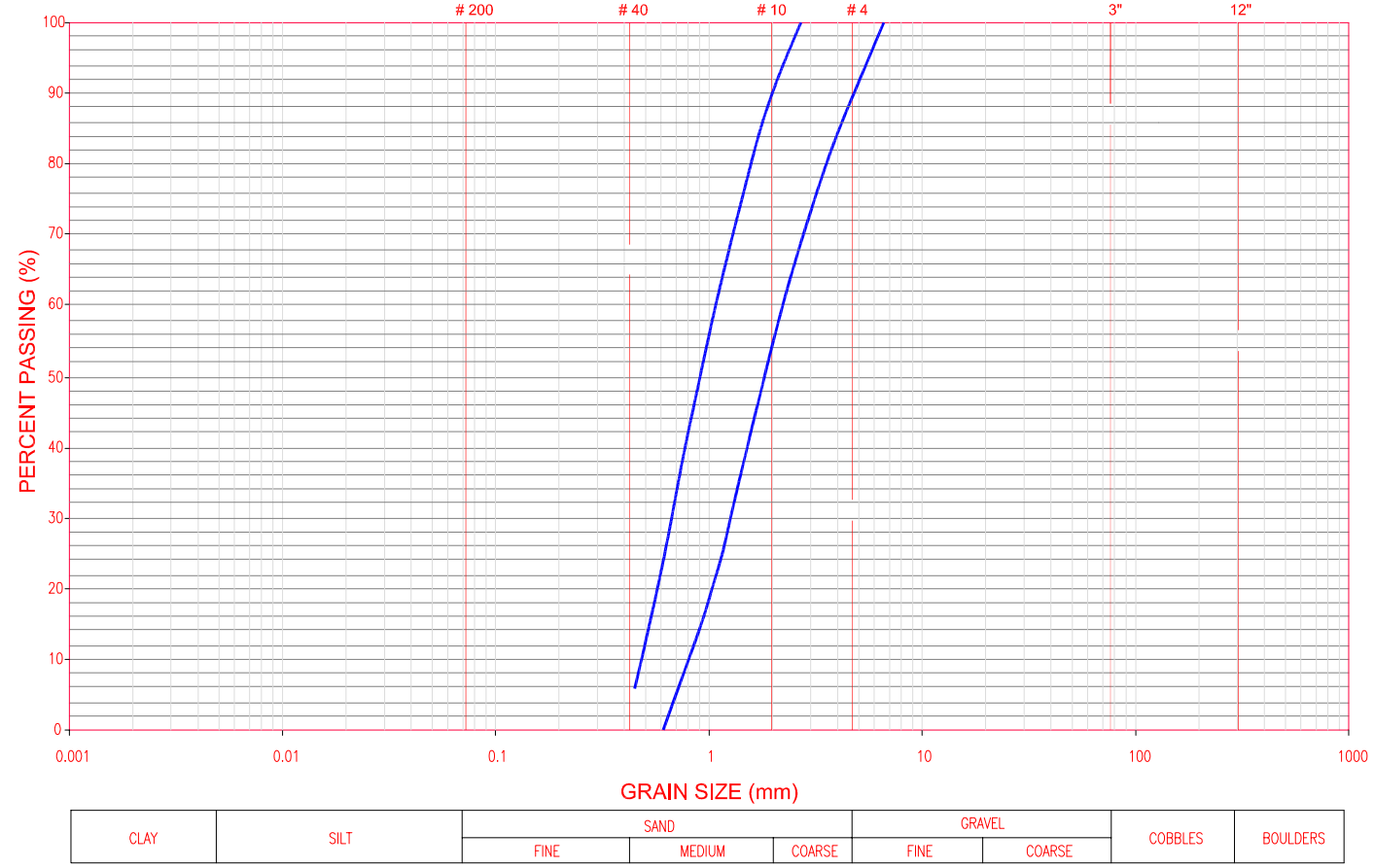

(d) FILTER SAND FOR DRAINAGE WELLS AND PIEZOMETER TIPS

SMALL DAMS ORGANIZATION
GOVERNMENT OF KHYBER PAKHTUNKHWA

BARQAAB CONSULTING SERVICES
(PVT)LIMITED LAHORE

SANAM DAM PROJECT
LOWER DIR

REV.	DATE	DESCRIPTION		
			DRAWN	IMTIAZ
			CHECKED	TANVIR ABBAS
			SUBMITTED	TANVIR ABBAS
			APPROVED	M.T.A

SPECIFICATION GRADING LIMITS FOR FILL MATERIAL

DATE: January, 2018

DRAWING NO. **BQB-SDP-MD-53**

LEGEND

Symbol	Description	Purpose
▲	Marker	To observe horizontal & vertical movements
▌	Piezometer	To observe pore water pressure
●	Slope Indicator	To observe lateral movement in fill
T	Settlement Gauge	To observe settlemnt of foundation & consolidation of fill

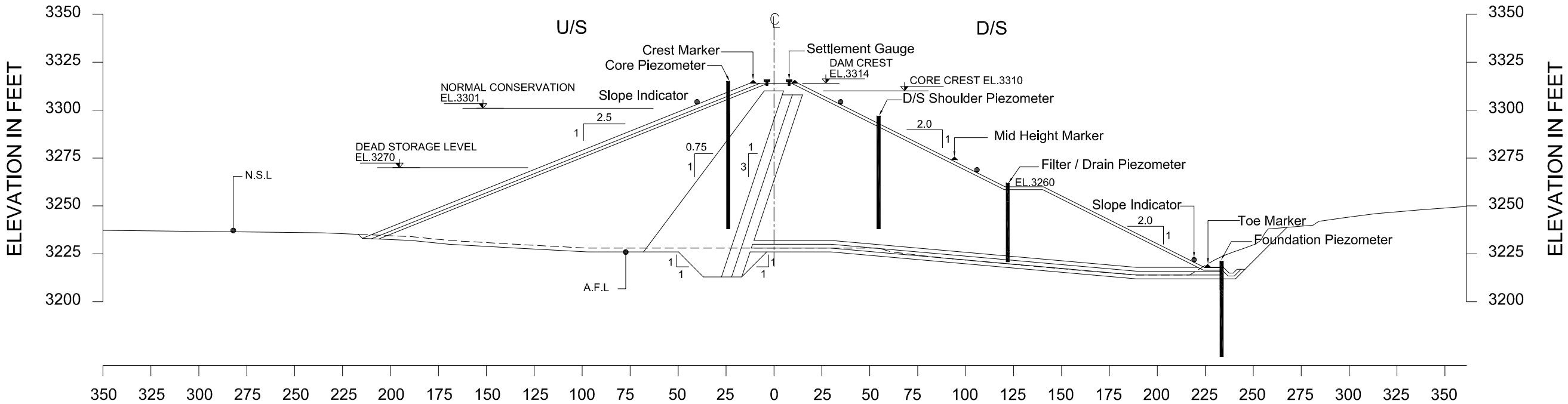

NOTES:-

1. **ALL DIMENSIONS ARE IN FEET**
2. **CREST MARKERS HAVE BEEN PROPOSED AT INTERVAL OF 150 FT. OR AS DIRECTED BY ENGINEER AT SITE**
3. **MID-HEIGHT & TOE MARKERS HAVE BEEN PROPOSED AT INTERVAL OF 150 FT. OR AS DIRECTED BY ENGINEER AT SITE**
4. **THREE SECTIONS AT INTERVAL OF 200 FT APART HAVE BEEN PROPOSED FOR INSTALLATION OF SETTLEMENT GAUGES**
5. **PIEZOMETERS ARE PROPOSED AT RD 0+300 AND AT RD 0+700**
6. **SLOPE INDICATORS ARE PROPOSED AT RD 0+700**

0 60 120 180 FEET

SCALE: 1"=60 Feet

SMALL DAMS ORGANIZATION GOVERNMENT OF KHYBER PAKHTUNKHWA	BARQAAB CONSULTING SERVICES (PVT)LIMITED LAHORE	SANAM DAM PROJECT LOWER DIR			DRAWN	IMTIAZ	**MAIN EMBANKMENT INSTRUMENTATION**
					CHECKED	TANVIR ABBAS	
					SUBMITTED	TANVIR ABBAS	DATE: January, 2018 / DRAWING NO. **BQB-SDP-MD-54**
			REV.	DATE	APPROVED	M.T.A	
				DESCRIPTION			

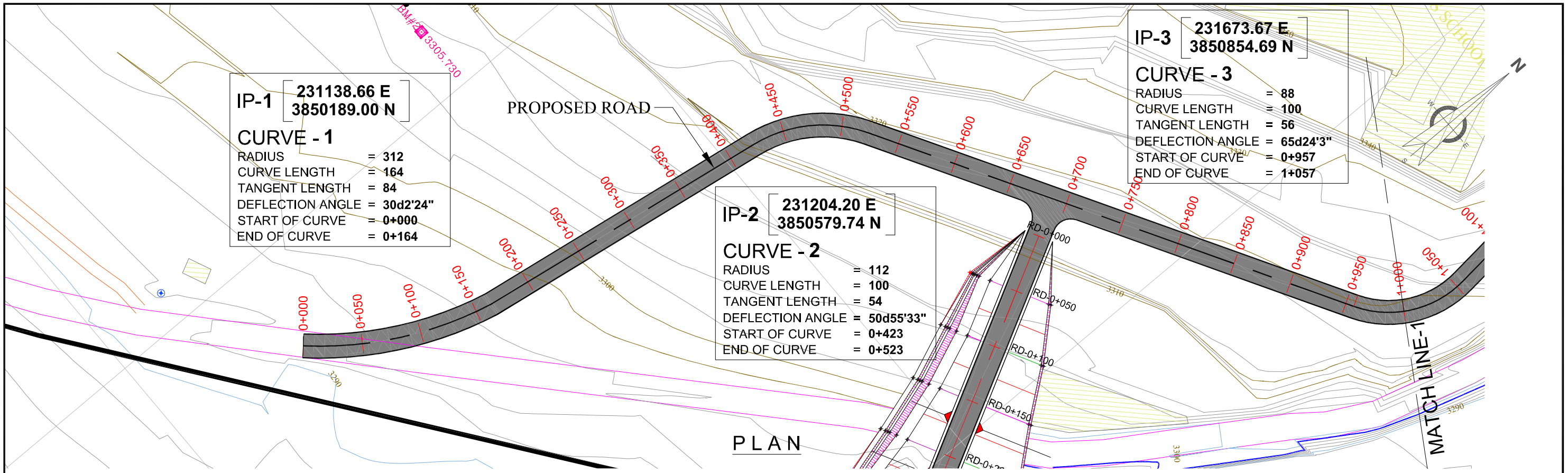

PLAN

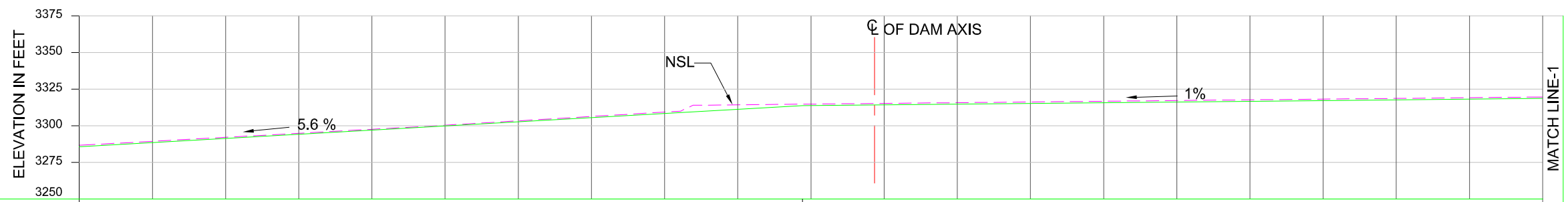

PROPOSED DESIGN																					
ROAD SLOPE	5.6 %											1.0 %									
ROAD WIDTH (ft.)	20 FEET																				
ROAD LEVEL (ft)	3285.67	3288.51	3291.34	3294.18	3297.02	3299.86	3302.70	3305.54	3308.38	3311.21	3313.78	3314.27	3314.75	3315.24	3315.73	3316.21	3316.70	3317.18	3317.67	3318.15	3318.64
NATURAL SURFACE LEVEL (ft)	3286.67	3289.41	3292.14	3294.88	3297.61	3300.38	3303.37	3306.36	3309.34	3314.30	3314.78	3315.27	3315.75	3316.24	3316.73	3317.21	3317.70	3318.18	3318.67	3319.15	3319.64
DISTANCE. R.D (ft)	0+000	0+050	0+100	0+150	0+200	0+250	0+300	0+350	0+400	0+450	0+500	0+550	0+600	0+650	0+700	0+750	0+800	0+850	0+900	0+950	1+000

PROFILE

SMALL DAMS ORGANIZATION
GOVERNMENT OF KHYBER PAKHTUNKHWA

BARQAAB CONSULTING SERVICES
(PVT)LIMITED LAHORE

SANAM DAM PROJECT
LOWER DIR

REV.	DATE	DESCRIPTION

DRAWN	IMTIAZ
CHECKED	TANVIR ABBAS
SUBMITTED	TANVIR ABBAS
APPROVED	M.T.A

RIGHT ABUTMENT ACCESS ROAD PLAN & PROFILE RD 0+000 TO 1+000

DATE: April, 2018

DRAWING NO. **BQB-SDP-MD-55**

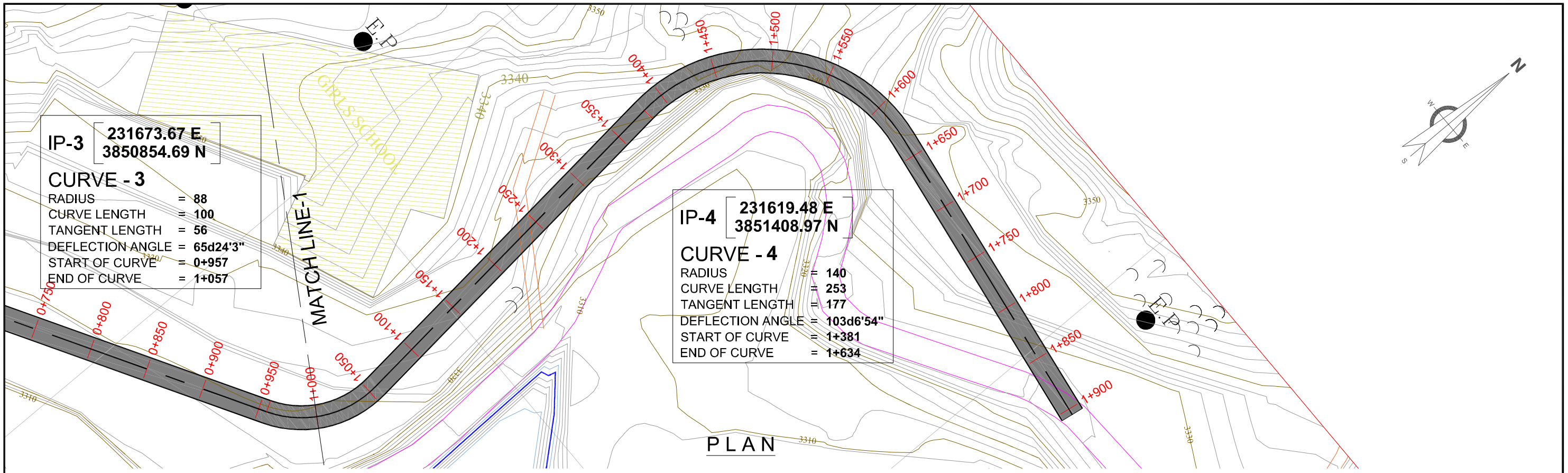

PLAN

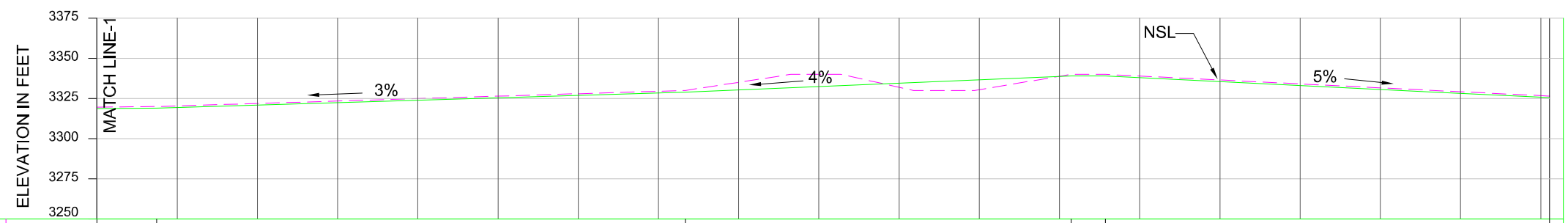

PROPOSED DESIGN																			
ROAD SLOPE	1.0 %	3.0 %				4.0 %				0.0 %	5.0 %								
ROAD WIDTH (ft.)	20 FEET																		
ROAD LEVEL (ft)	3318.64	3319.39	3320.91	3322.42	3323.94	3325.46	3326.97	3328.49	3330.38	3332.46	3334.54	3336.61	3338.69	3337.95	3335.52	3333.08	3330.64	3328.20	3325.77
NATURAL SURFACE LEVEL (ft)	3319.64	3320.39	3321.91	3323.42	3324.94	3326.46	3327.97	3329.49	3335.06	3340.00	3331.98	3330.50	3338.79	3338.96	3336.52	3334.08	3331.64	3329.21	3326.77
DISTANCE. R.D (ft)	1+000	1+050	1+100	1+150	1+200	1+250	1+300	1+350	1+400	1+450	1+500	1+550	1+600	1+650	1+700	1+750	1+800	1+850	1+900

PROFILE

SMALL DAMS ORGANIZATION
GOVERNMENT OF KHYBER PAKHTUNKHWA

BARQAAB CONSULTING SERVICES
(PVT)LIMITED LAHORE

SANAM DAM PROJECT
LOWER DIR

REV.	DATE	DESCRIPTION		
			DRAWN	IMTIAZ
			CHECKED	TANVIR ABBAS
			SUBMITTED	TANVIR ABBAS
			APPROVED	M.T.A

RIGHT ABUTMENT ACCESS ROAD
PLAN & PROFILE RD 1+000 TO 1+900

DATE: April, 2018

DRAWING NO. **BQB-SDP-MD-56**

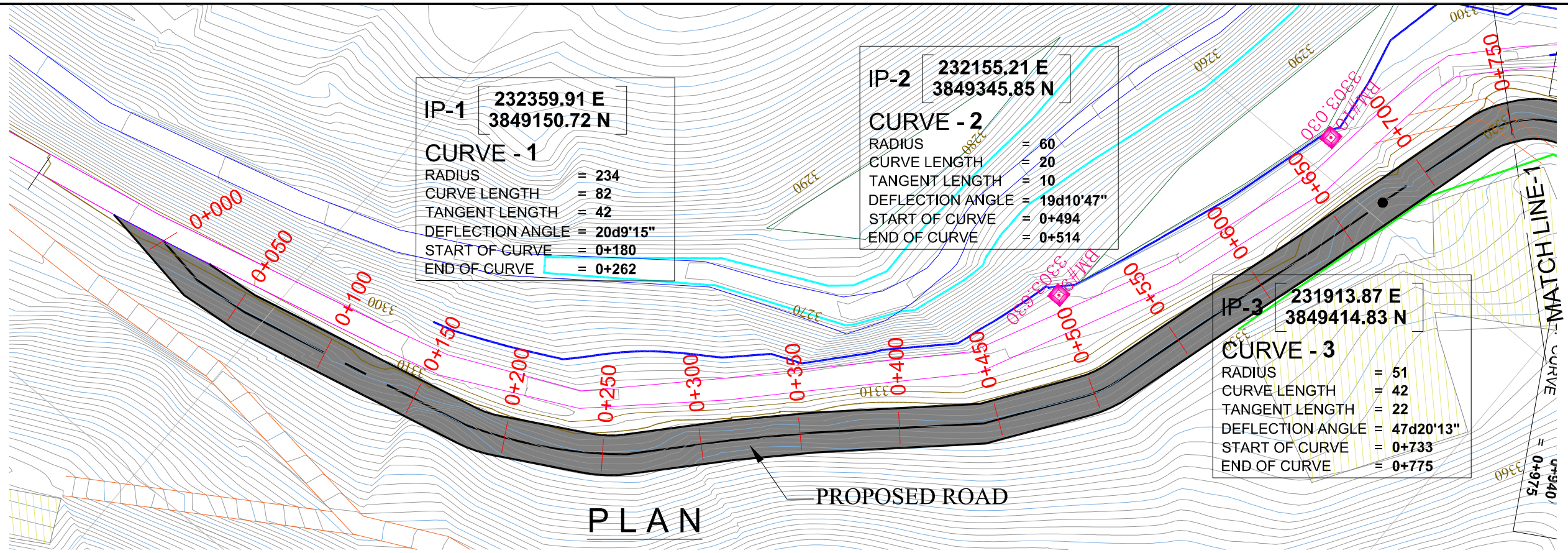

PLAN

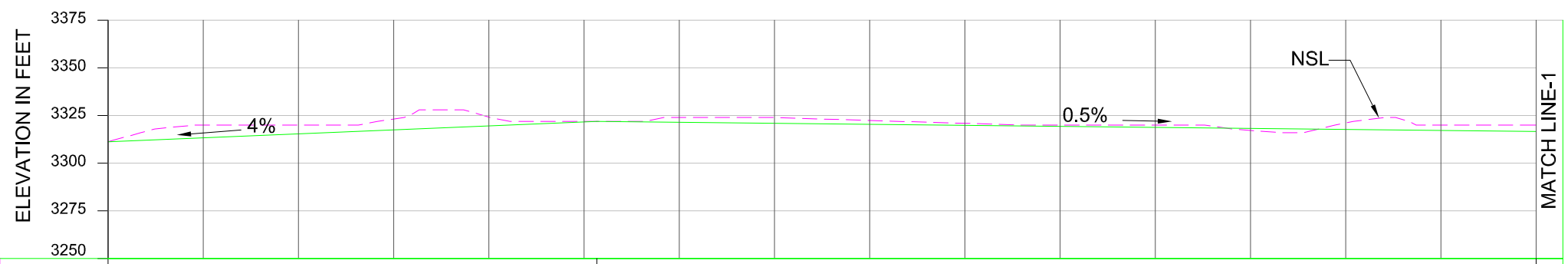

PROPOSED DESIGN

ROAD SLOPE	4.0 %						0.5 %									
ROAD WIDTH (ft.)	16 FEET															
ROAD LEVEL (ft)	3311.33	3313.41	3315.49	3317.57	3319.64	3321.72	3321.54	3321.01	3320.47	3319.94	3319.41	3318.87	3318.34	3317.81	3317.27	3316.74
NATURAL SURFACE LEVEL (ft)	3311.33	3320.00	3320.00	3323.21	3324.26	3322.00	3324.00	3323.98	3322.45	3320.95	3320.00	3320.00	3317.26	3321.18	3320.00	3320.00
DISTANCE. R.D (ft)	0+000	0+050	0+100	0+150	0+200	0+250	0+300	0+350	0+400	0+450	0+500	0+550	0+600	0+650	0+700	0+750

PROFILE

SMALL DAMS ORGANIZATION
GOVERNMENT OF KHYBER PAKHTUNKHWA

BARQAAB CONSULTING SERVICES
(PVT)LIMITED LAHORE

SANAM DAM PROJECT
LOWER DIR

REV.	DATE	DESCRIPTION		
			DRAWN	IMTIAZ
			CHECKED	TANVIR ABBAS
			SUBMITTED	TANVIR ABBAS
			APPROVED	M.T.A

LEFT ABUTMENT ACCESS ROAD
PLAN & PROFILE RD 0+000 TO 0+750

DATE: April, 2018

DRAWING NO. **BQB-SDP-MD-57**

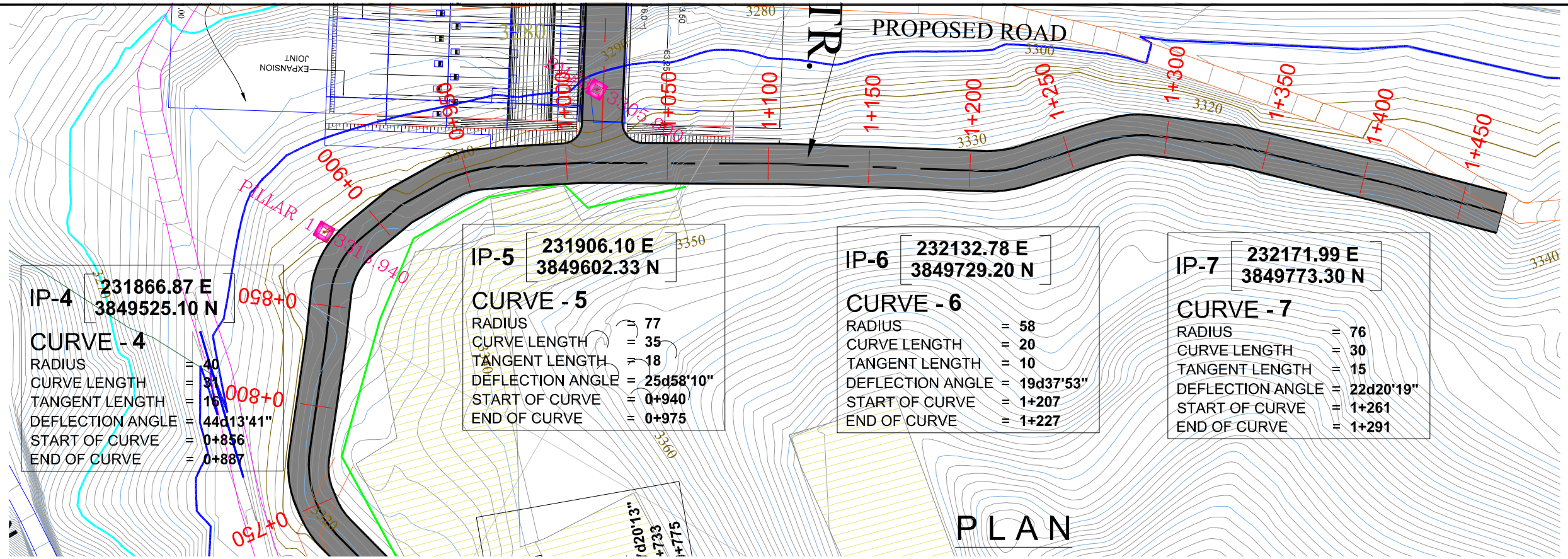

PLAN

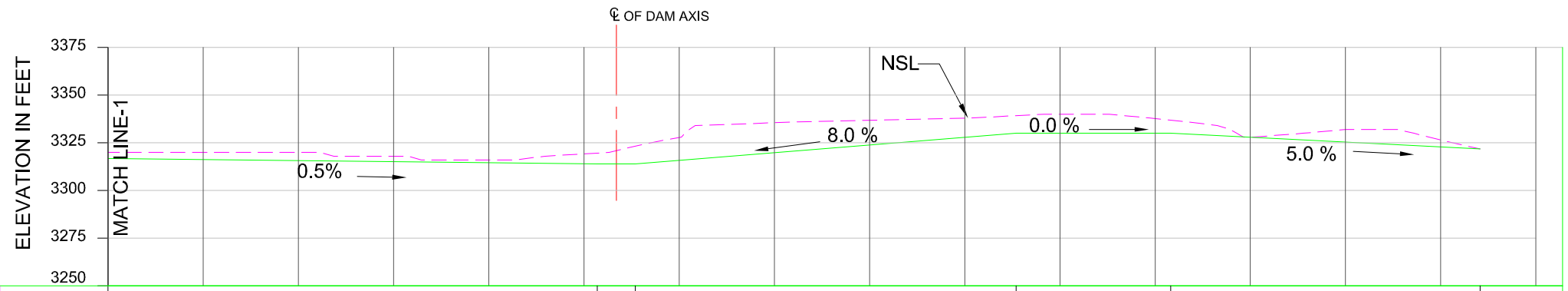

PROPOSED DESIGN																
ROAD SLOPE	0.5 %					0.0 %	8.0 %				0.0 %	5.0 %				
ROAD WIDTH (ft.)	16 FEET															
ROAD LEVEL (ft)	3316.74	3316.21	3315.67	3315.14	3314.61	3314.07	3315.84	3319.84	3323.84	3327.84	3330.00	3330.00	3327.91	3325.41	3322.91	3321.87
NATURAL SURFACE LEVEL (ft)	3320.00	3320.00	3320.00	3318.00	3316.00	3319.21	3327.79	3335.54	3336.83	3337.93	3340.00	3337.70	3328.00	3332.00	3326.52	3321.87
DISTANCE. R.D (ft)	0+750	0+800	0+850	0+900	0+950	1+000	1+050	1+100	1+150	1+200	1+250	1+300	1+350	1+400	1+450	1+471

PROFILE

SMALL DAMS ORGANIZATION
GOVERNMENT OF KHYBER PAKHTUNKHWA

BARQAAB CONSULTING SERVICES
(PVT)LIMITED LAHORE

SANAM DAM PROJECT
LOWER DIR

REV.	DATE	DESCRIPTION		
			DRAWN	IMTIAZ
			CHECKED	TANVIR ABBAS
			SUBMITTED	TANVIR ABBAS
			APPROVED	M.T.A

LEFT ABUTMENT ACCESS ROAD
PLAN & PROFILE RD 0+750 TO 1+471

DATE: April, 2018

DRAWING NO. **BQB-SDP-MD-58**

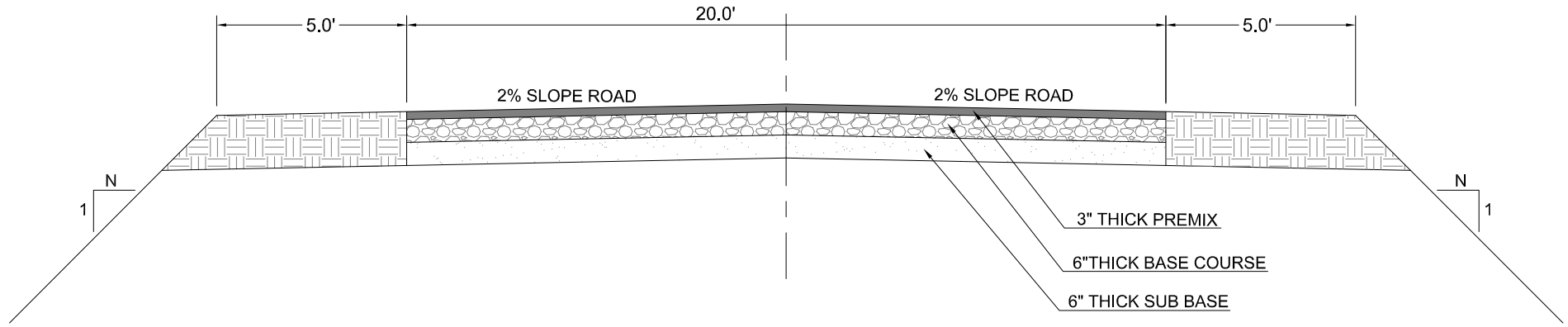

TYPICAL CROSS SECTION OF ROAD (FILL)

FILL SLOPE RATIO (TABLE)

HIGHT (H.F)	FILL SLOPE
0 TO 5.0'	1 : 5 : 1
More Then 5.0'	1 : 1

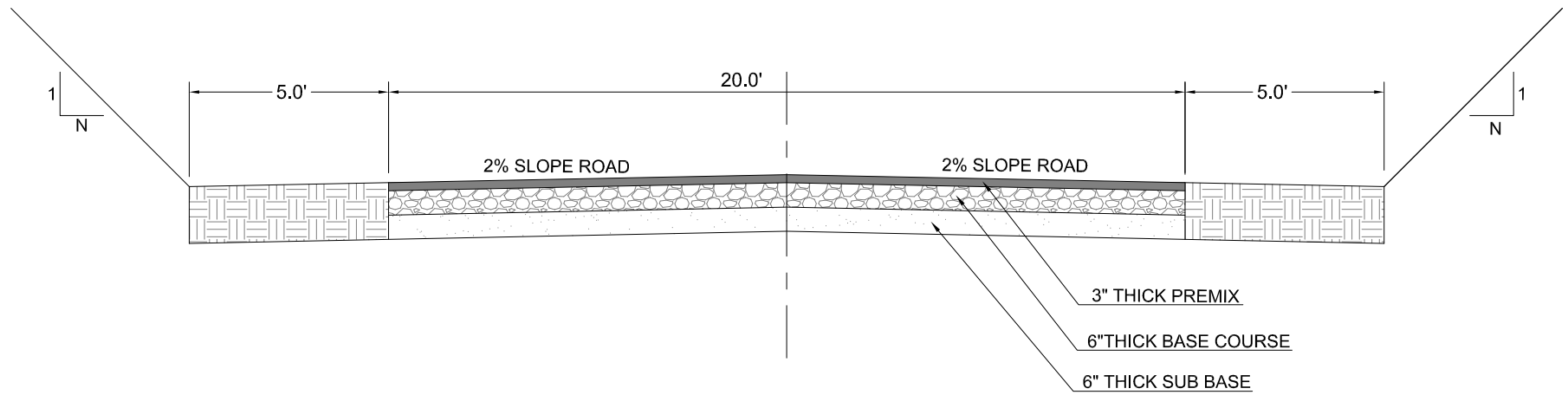

TYPICAL CROSS SECTION OF ROAD (CUT)

CUT SLOPE RATIO (TABLE)

	DEPTH	CUT SLOPE (H.V.)
EARTH	0 ~ 5.0'	1 : 1
	More Then 5.0'	1 : 25 : 1
	More Then 10.0'	1 : 125 : 1

CUT SLOPE RATIO (TABLE)

	DEPTH	CUT SLOPE (H.V.)
HARD ROCK	0 ~ 5.0'	Vertical
	More Then 5.0'	Vertical

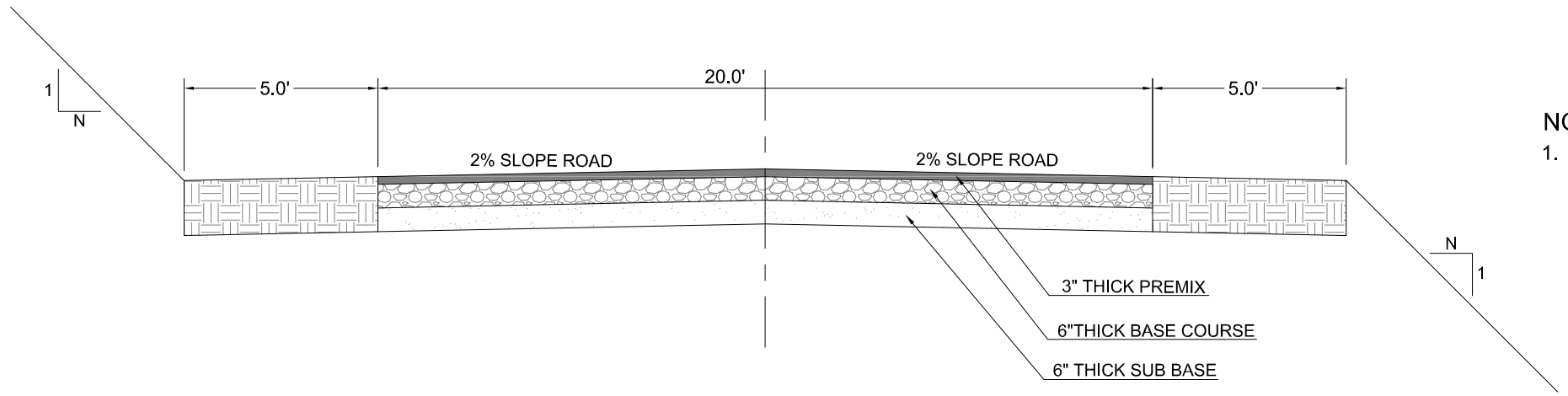

TYPICAL CROSS SECTION OF ROAD (CUT & FILL)

NOTES:

1. ALL DIMENSIONS ARE IN FEET

SMALL DAMS ORGANIZATION GOVERNMENT OF KHYBER PAKHTUNKHWA	BARQAAB CONSULTING SERVICES (PVT)LIMITED LAHORE	SANAM DAM PROJECT LOWER DIR				DRAWN	IMTIAZ	RIGHT ABUTMENT ACCESS ROAD TYPICAL SECTIONS
						CHECKED	TANVIR ABBAS	
						SUBMITTED	TANVIR ABBAS	DATE: April, 2018 / DRAWING NO. BQB-SDP-MD-59
			REV.	DATE	DESCRIPTION	APPROVED	M.T.A	

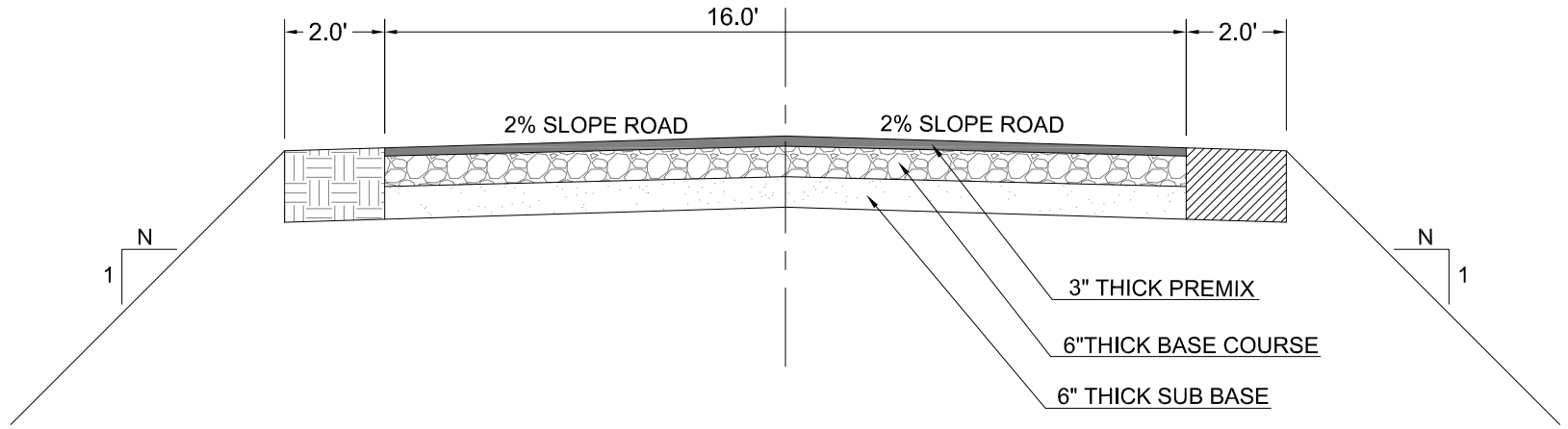

TYPICAL CROSS SECTION OF ROAD (FILL)

FILL SLOPE RATIO (TABLE)

HIGHT (H.F)	FILL SLOPE
0 TO 5.0'	1 : 5 : 1
More Then 5.0'	1 : 1

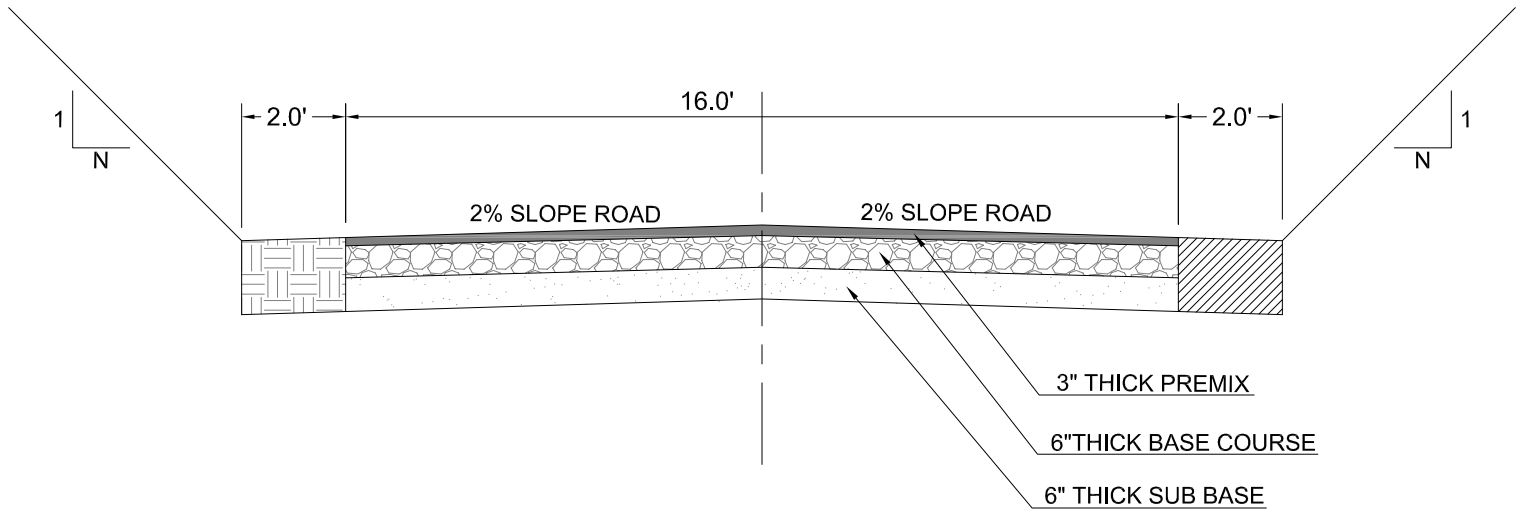

TYPICAL CROSS SECTION OF ROAD (CUT)

CUT SLOPE RATIO (TABLE)

	DEPTH	CUT SLOPE (H.V.)
EARTH	0 ~ 5.0'	1 : 1
	More Then 5.0'	1 : 25 : 1
	More Then 10.0'	1 : 125 : 1

CUT SLOPE RATIO (TABLE)

	DEPTH	CUT SLOPE (H.V.)
HARD ROCK	0 ~ 5.0'	Vertical
	More Then 5.0'	Vertical

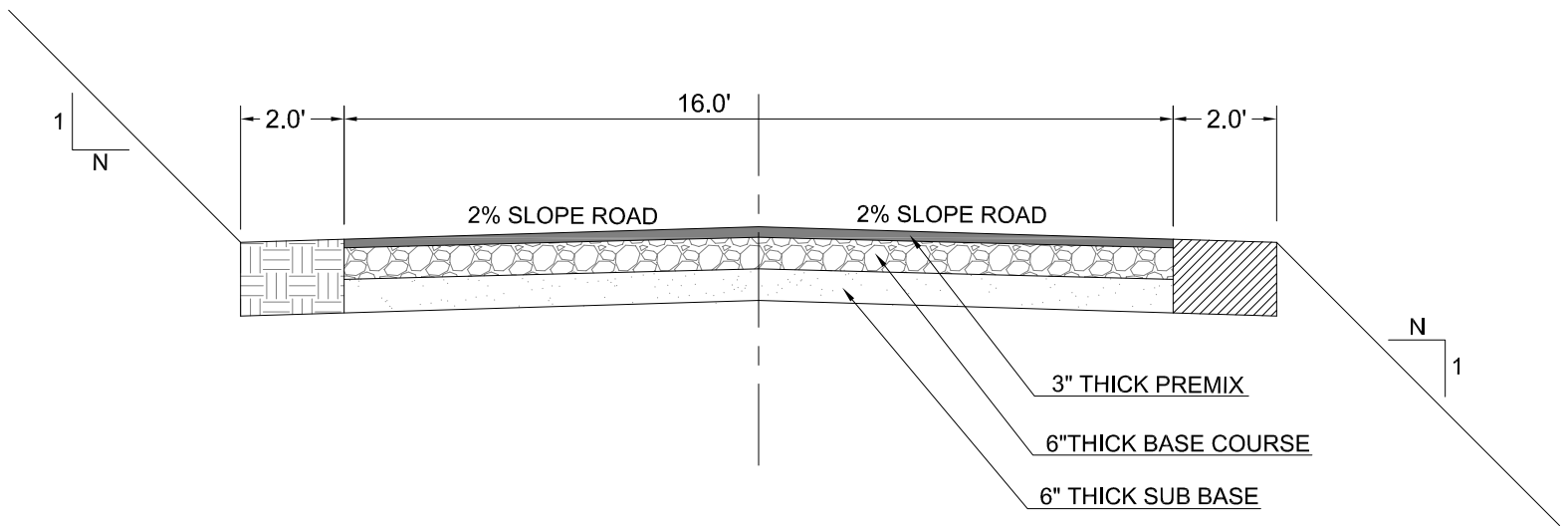

TYPICAL CROSS SECTION OF ROAD (CUT & FILL)

NOTES:

1. ALL DIMENSIONS ARE IN FEET

SMALL DAMS ORGANIZATION GOVERNMENT OF KHYBER PAKHTUNKHWA	BARQAAB CONSULTING SERVICES (PVT)LIMITED LAHORE	SANAM DAM PROJECT LOWER DIR			DRAWN	IMTIAZ	LEFT ABUTMENT ACCESS ROAD TYPICAL SECTIONS
					CHECKED	TANVIR ABBAS	
					SUBMITTED	TANVIR ABBAS	DATE: April, 2018 / DRAWING NO. BQB-SDP-MD-60
			REV.	DATE	APPROVED	M.T.A	

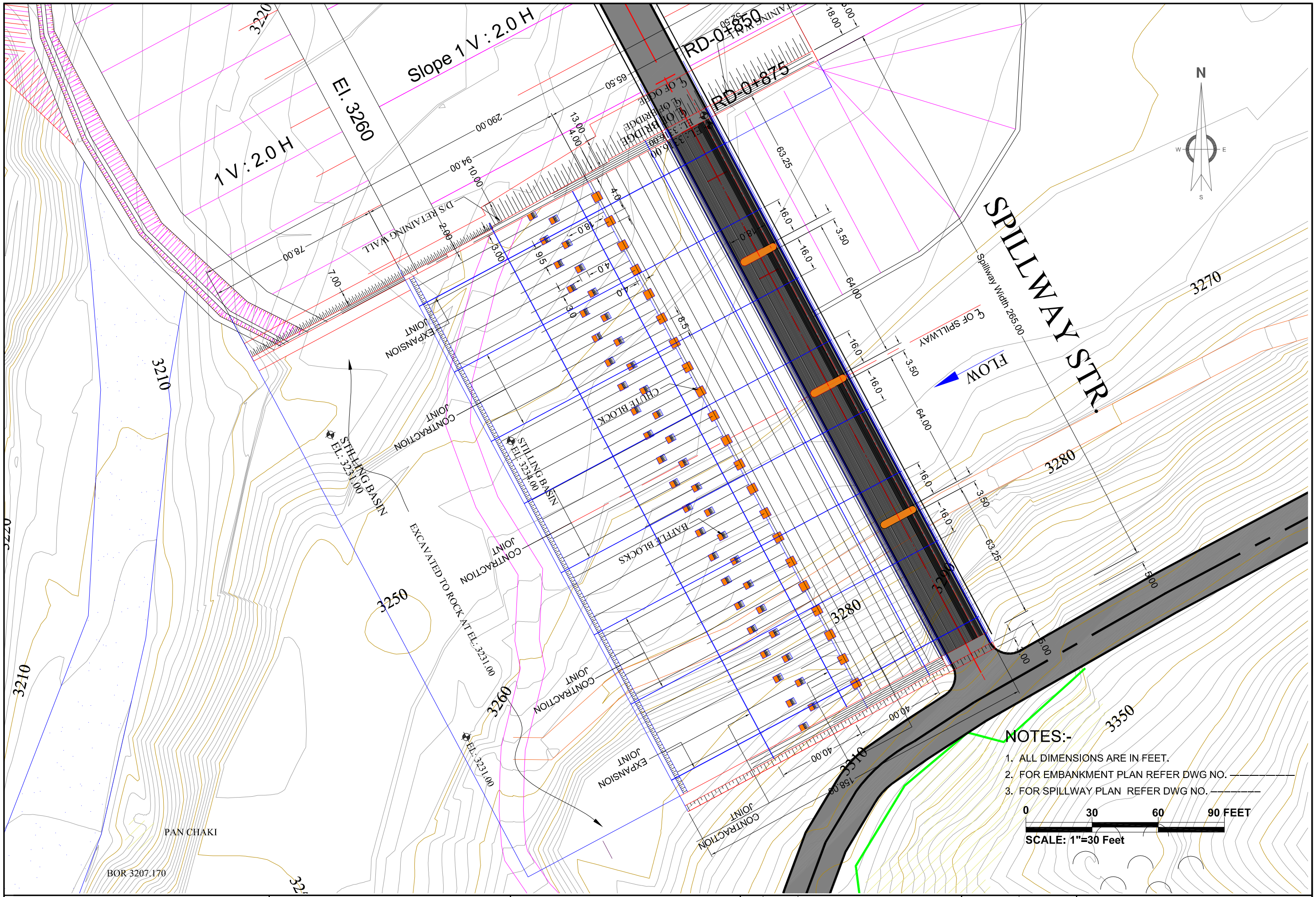

SMALL DAMS ORGANIZATION
GOVERNMENT OF KHYBER PAKHTUNKHWA

BARQAAB CONSULTING SERVICES
(PVT)LIMITED LAHORE

SANAM DAM PROJECT
LOWER DIR

REV.	DATE	DESCRIPTION

DRAWN	IMTIAZ AHMED
CHECKED	MANZAR MUMTAZ
SUBMITTED	MANZAR MUMTAZ
APPROVED	M.T.A

SPILLWAY GENERAL LAYOUT PLAN

DATE: April, 2018

DRAWING NO. **BQB-SDP-SP-01**

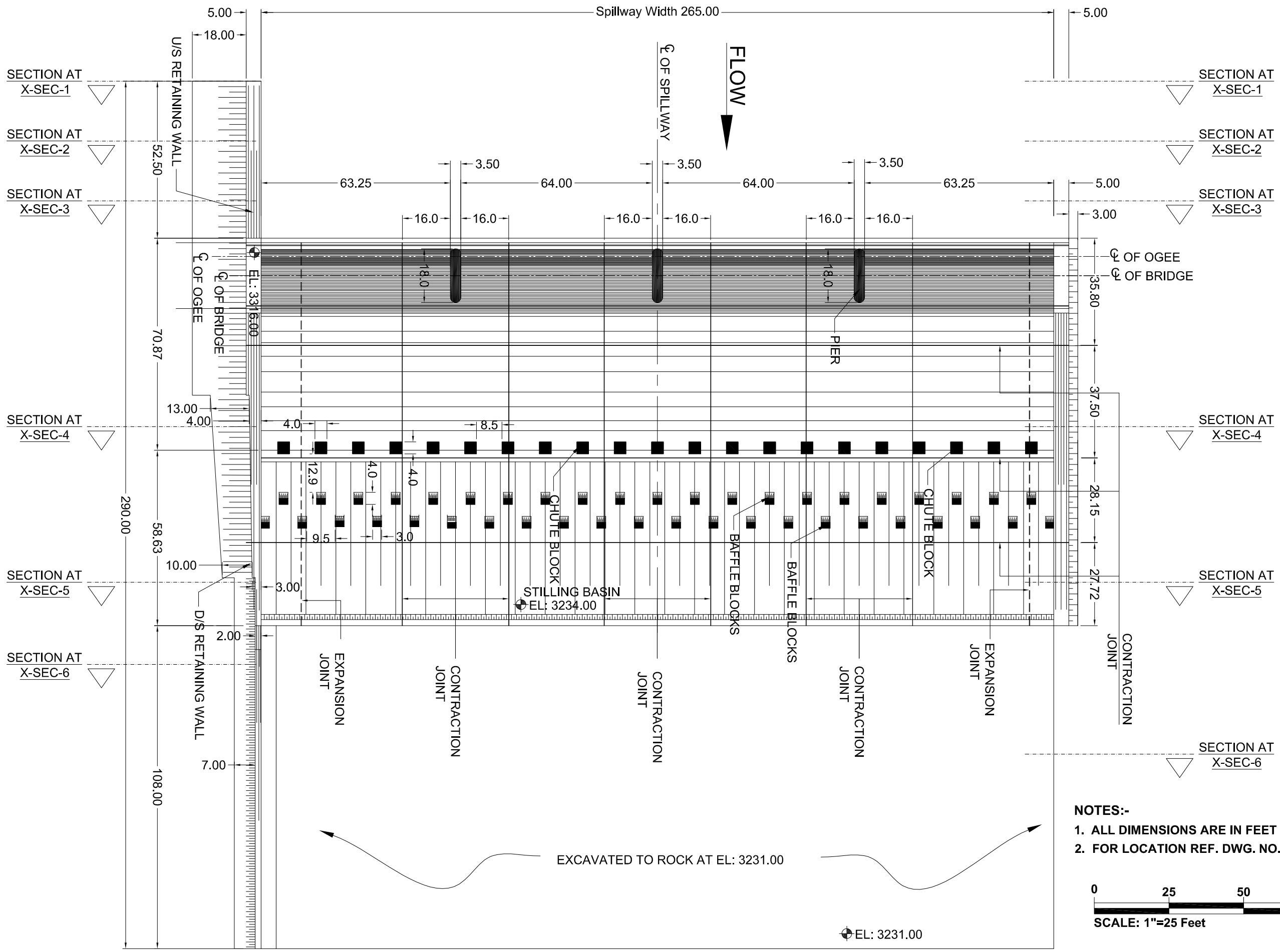

NOTES:-

1. **ALL DIMENSIONS ARE IN FEET**
2. **FOR LOCATION REF. DWG. NO. BQB-SDP-SP-01**

0 25 50 75 FEET

SCALE: 1"=25 Feet

SMALL DAMS ORGANIZATION GOVERNMENT OF KHYBER PAKHTUNKHWA	BARQAAB CONSULTING SERVICES (PVT)LIMITED LAHORE	SANAM DAM PROJECT LOWER DIR		DRAWN	IMTIAZ AHMED	**SPILLWAY STRUCTURE PLAN**
				CHECKED	MANZAR MUMTAZ	
				SUBMITTED	MANZAR MUMTAZ	DATE: April, 2018 / DRAWING NO. **BQB-SDP-SP-02**
			REV. / DATE / DESCRIPTION	APPROVED	M.T.A	

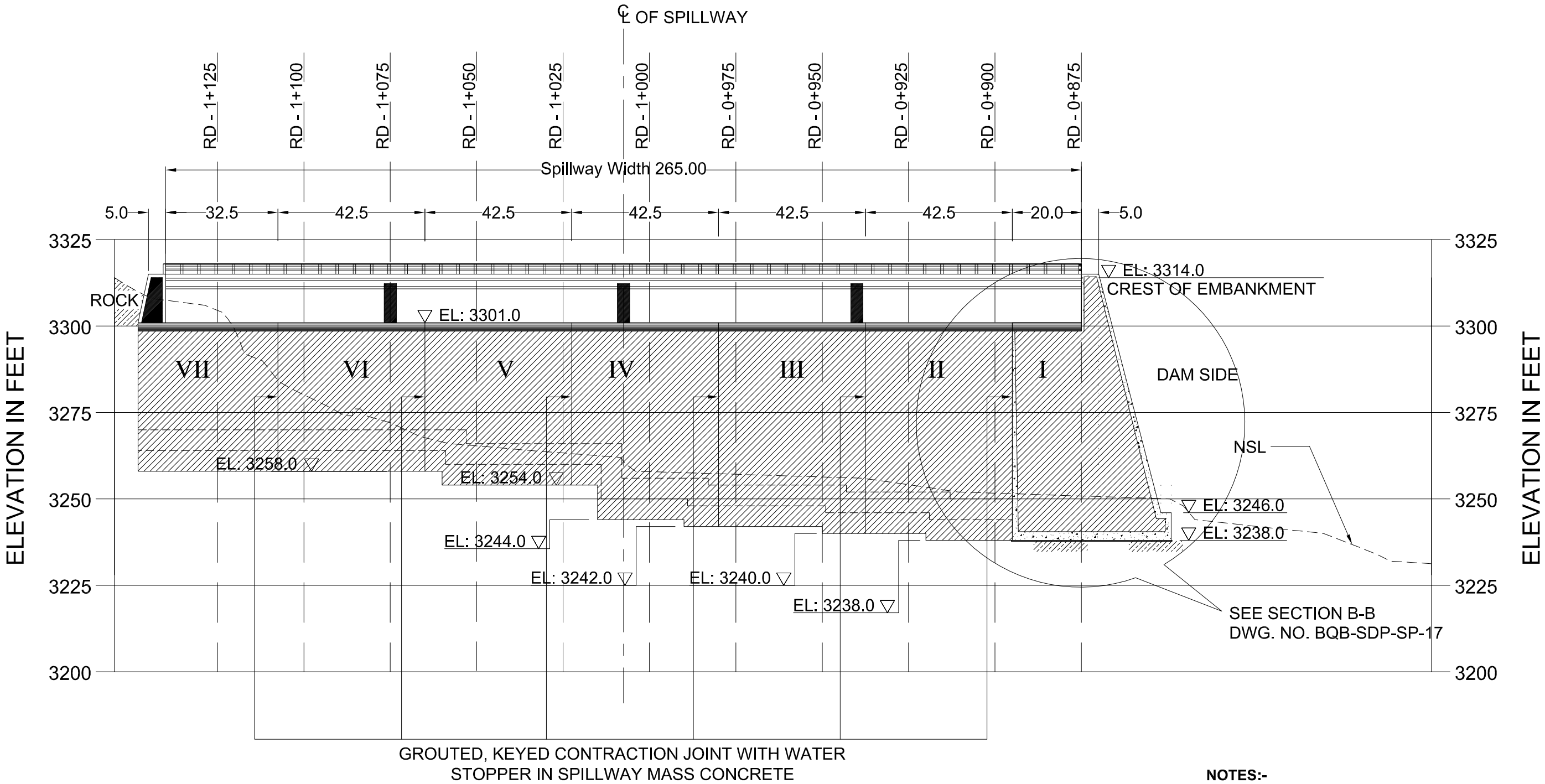

NOTES:-

1. **ALL DIMENSIONS ARE IN FEET**
2. **FOR LOCATION REF. DWG. NO. BQB-SDP-SP-02**

SMALL DAMS ORGANIZATION GOVERNMENT OF KHYBER PAKHTUNKHWA	BARQAAB CONSULTING SERVICES (PVT)LIMITED LAHORE	SANAM DAM PROJECT LOWER DIR		DRAWN	IMTIAZ AHMED	**SPILLWAY CROSS SECTION AT CENTERLINE**
				CHECKED	MANZAR MUMTAZ	
				SUBMITTED	MANZAR MUMTAZ	DATE: April, 2018 / DRAWING NO. **BQB-SDP-SP-03**
			REV. / DATE / DESCRIPTION	APPROVED	M.T.A	

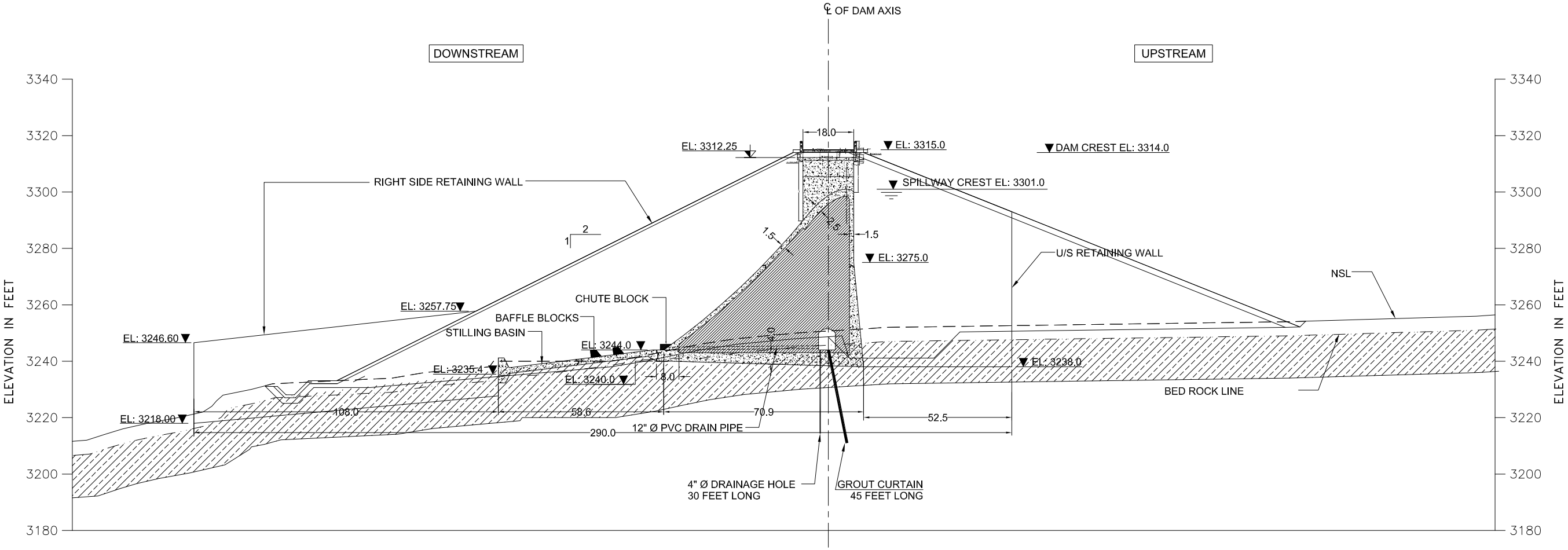

SPECIAL NOTE:
THE SPILLWAY BASE MUST BE PLACED A MINIMUM OF 6 FEET INTO SOUND ROCK ON ROUGHENED SURFACE.

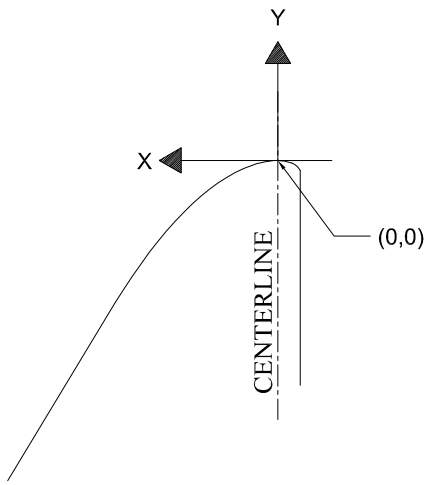

LEGEND

- Concrete (3000 Psi at 90 days)
- Concrete (3000 Psi at 28 days)
- Bed Rock

NOTE:
1. ALL DIMENSIONS ARE IN FEET.

SMALL DAMS ORGANIZATION GOVERNMENT OF KHYBER PAKHTUNKHWA	BARQAAB CONSULTING SERVICES (PVT)LIMITED LAHORE	SANAM DAM PROJECT LOWER DIR			DRAWN	IMTIAZ AHMED
					CHECKED	MANZAR MUMTAZ
					SUBMITTED	MANZAR MUMTAZ
			REV.	DATE	DESCRIPTION	APPROVED	M.T.A

SPILLWAY CROSS SECTION
RD 0+870

DATE: April, 2018

DRAWING NO. **BQB-SDP-SP-04**

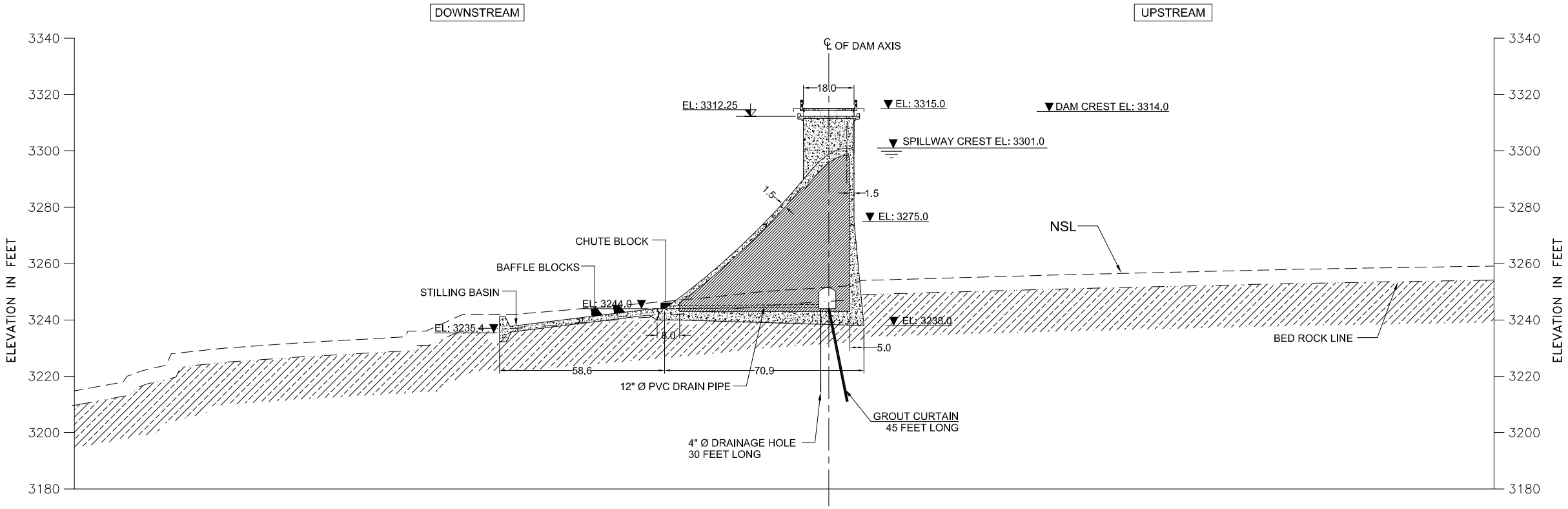

SPECIAL NOTE:

THE SPILLWAY BASE MUST BE PLACED A MINIMUM OF 6 FEET INTO SOUND ROCK ON ROUGHENED SURFACE.

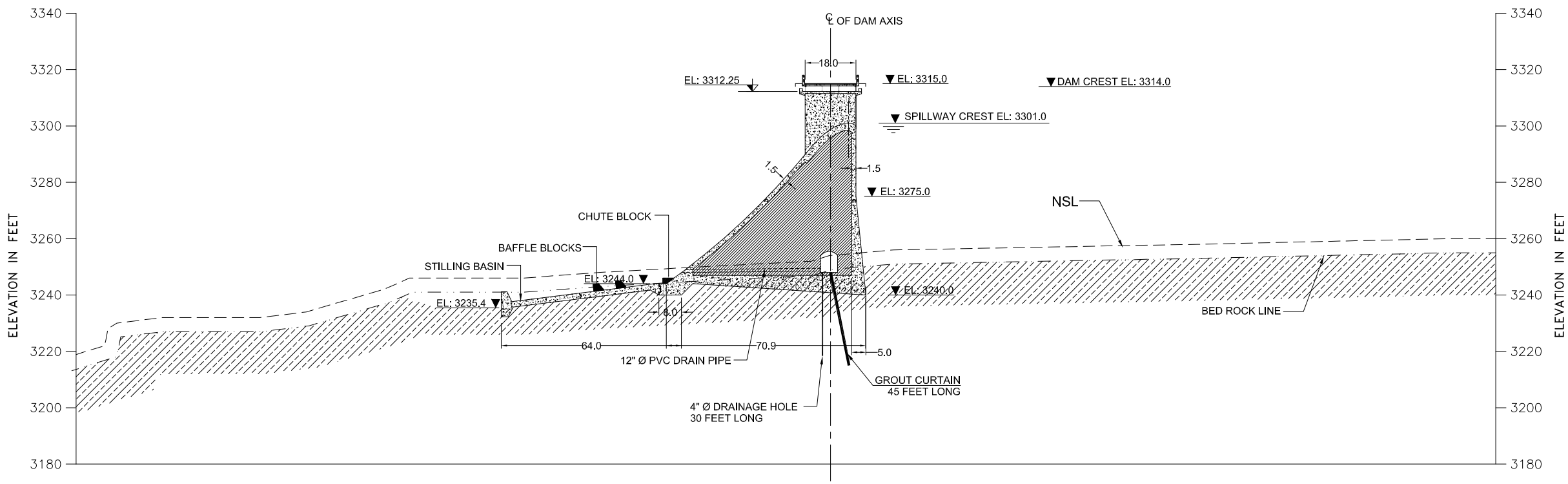

NOTE:

1. ALL DIMENSIONS ARE IN FEET.

SMALL DAMS ORGANIZATION GOVERNMENT OF KHYBER PAKHTUNKHWA	BARQAAB CONSULTING SERVICES (PVT)LIMITED LAHORE	SANAM DAM PROJECT LOWER DIR				DRAWN	IMTIAZ AHMED	SPILLWAY CROSS SECTIONS RD 0+900 & 0+925	
						CHECKED	MANZAR MUMTAZ		
						SUBMITTED	MANZAR MUMTAZ	DATE: April, 2018	DRAWING NO. BQB-SDP-SP-05
			REV.	DATE	DESCRIPTION	APPROVED	M.T.A		

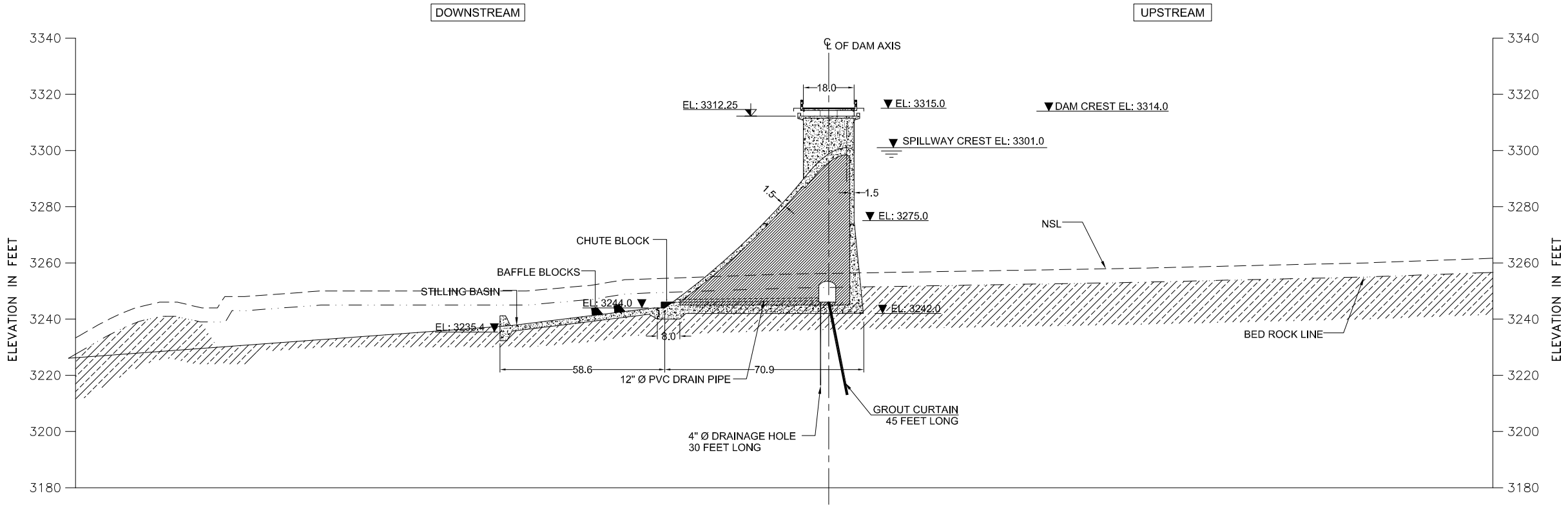

SPECIAL NOTE:

THE SPILLWAY BASE MUST BE PLACED A MINIMUM OF 6 FEET INTO SOUND ROCK ON ROUGHENED SURFACE.

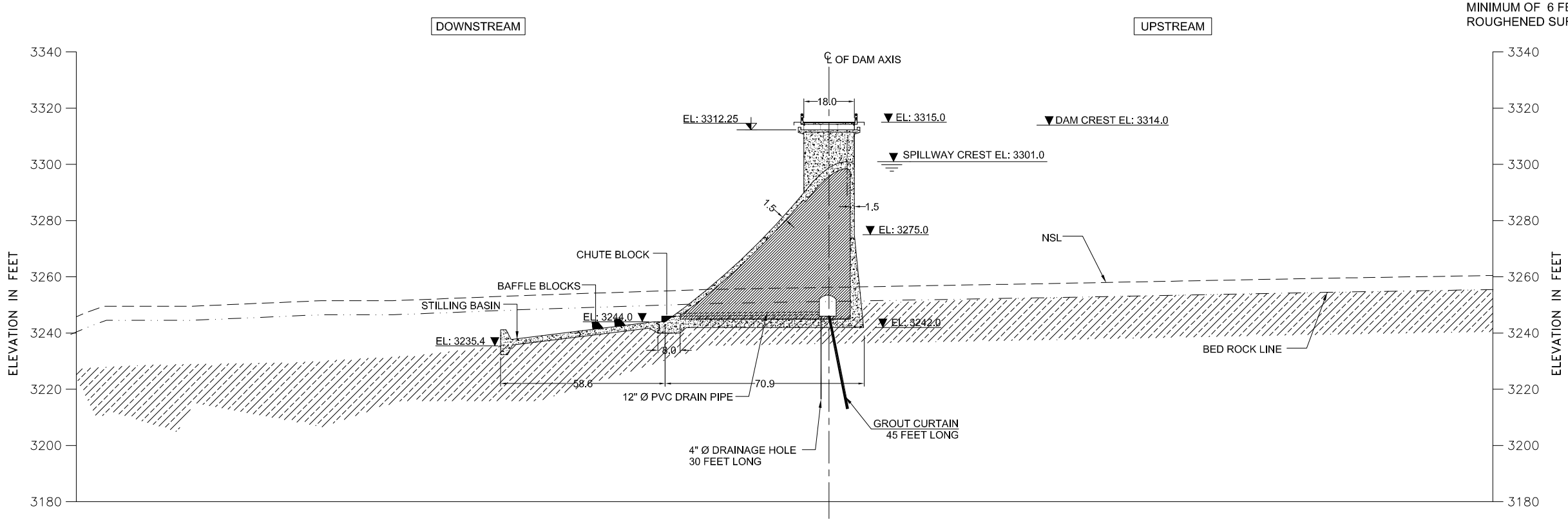

NOTE:

1. ALL DIMENSIONS ARE IN FEET.

SMALL DAMS ORGANIZATION GOVERNMENT OF KHYBER PAKHTUNKHWA	BARQAAB CONSULTING SERVICES (PVT)LIMITED LAHORE	SANAM DAM PROJECT LOWER DIR			DRAWN	IMTIAZ AHMED	**SPILLWAY CROSS SECTIONS RD 0+950 & 0+975**
					CHECKED	MANZAR MUMTAZ	
					SUBMITTED	MANZAR MUMTAZ	DATE: April, 2018 / DRAWING NO. **BQB-SDP-SP-06**
			REV.	DATE	DESCRIPTION	APPROVED	M.T.A

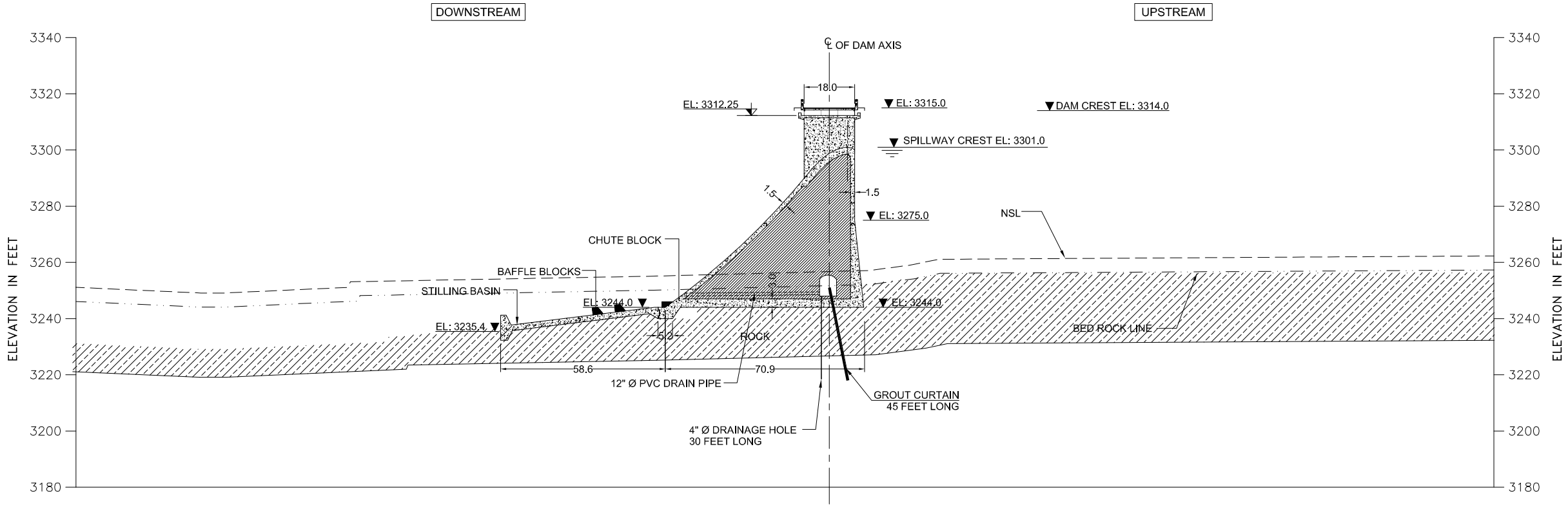

SPECIAL NOTE:

THE SPILLWAY BASE MUST BE PLACED A MINIMUM OF 6 FEET INTO SOUND ROCK ON ROUGHENED SURFACE.

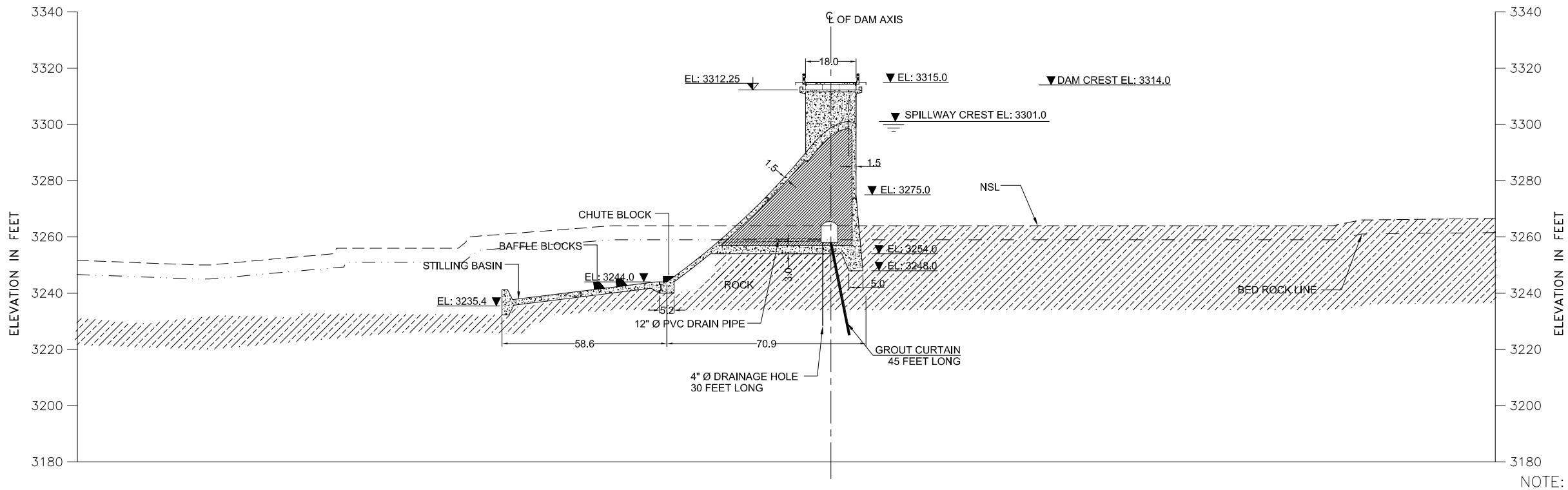

NOTE:

1. ALL DIMENSIONS ARE IN FEET.

SMALL DAMS ORGANIZATION GOVERNMENT OF KHYBER PAKHTUNKHWA	BARQAAB CONSULTING SERVICES (PVT)LIMITED LAHORE	SANAM DAM PROJECT LOWER DIR			DRAWN	IMTIAZ AHMED
					CHECKED	MANZAR MUMTAZ
					SUBMITTED	MANZAR MUMTAZ
			REV.	DATE	DESCRIPTION	APPROVED	M.T.A

SPILLWAY CROSS SECTIONS
RD 1+000 & 1+025

DATE: April, 2018

DRAWING NO. **BQB-SDP-SP-07**

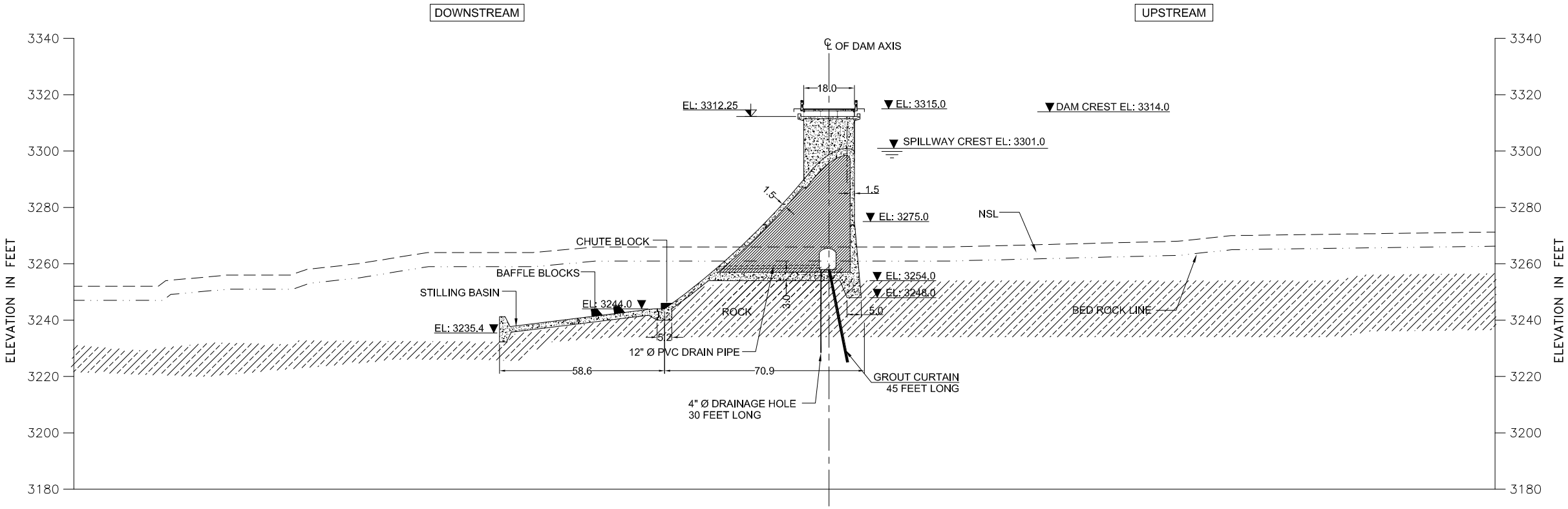

SPECIAL NOTE:

THE SPILLWAY BASE MUST BE PLACED A MINIMUM OF 6 FEET INTO SOUND ROCK ON ROUGHENED SURFACE.

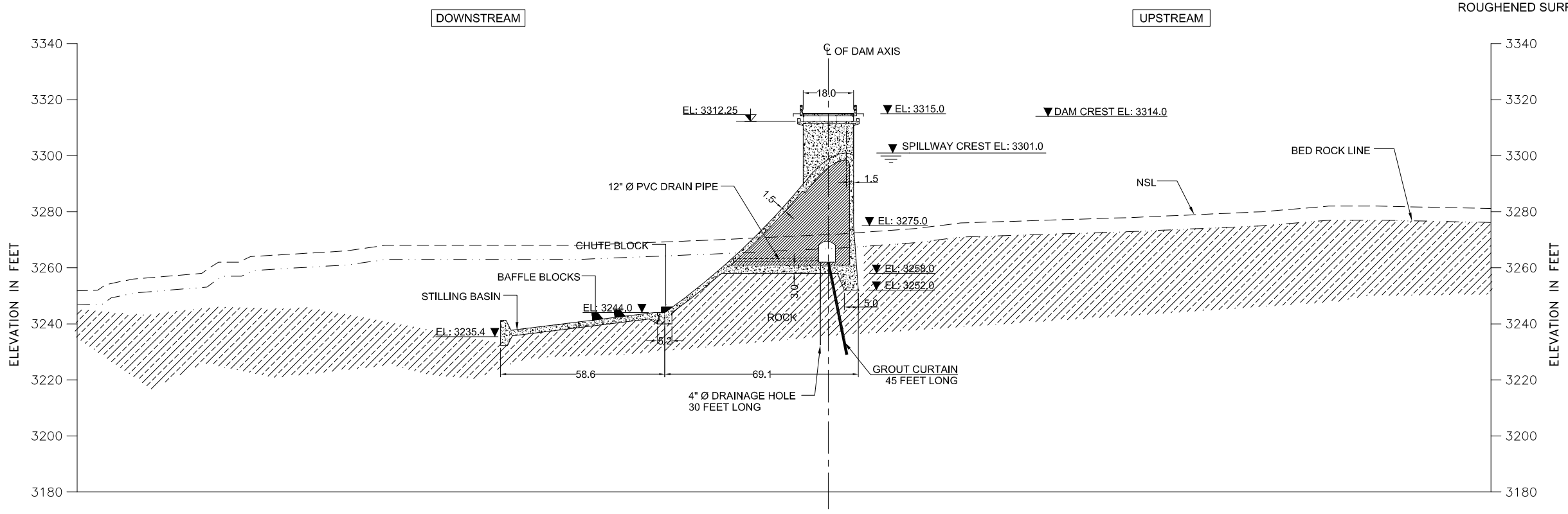

NOTE:

1. ALL DIMENSIONS ARE IN FEET.

SMALL DAMS ORGANIZATION GOVERNMENT OF KHYBER PAKHTUNKHWA	BARQAAB CONSULTING SERVICES (PVT)LIMITED LAHORE	SANAM DAM PROJECT LOWER DIR			DRAWN	IMTIAZ AHMED	**SPILLWAY CROSS SECTIONS RD 1+050 & 1+075**
					CHECKED	MANZAR MUMTAZ	
					SUBMITTED	MANZAR MUMTAZ	DATE: April, 2018 / DRAWING NO. **BQB-SDP-SP-08**
			REV.	DATE	APPROVED	M.T.A	

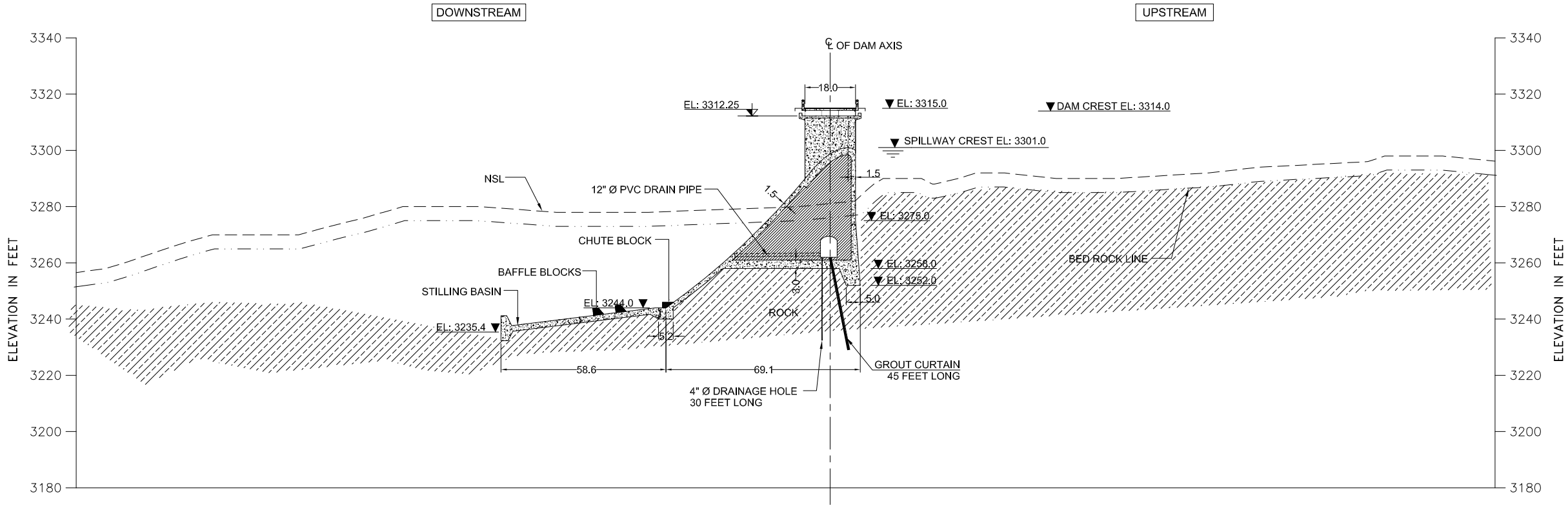

SPECIAL NOTE:

THE SPILLWAY BASE MUST BE PLACED A MINIMUM OF 6 FEET INTO SOUND ROCK ON ROUGHENED SURFACE.

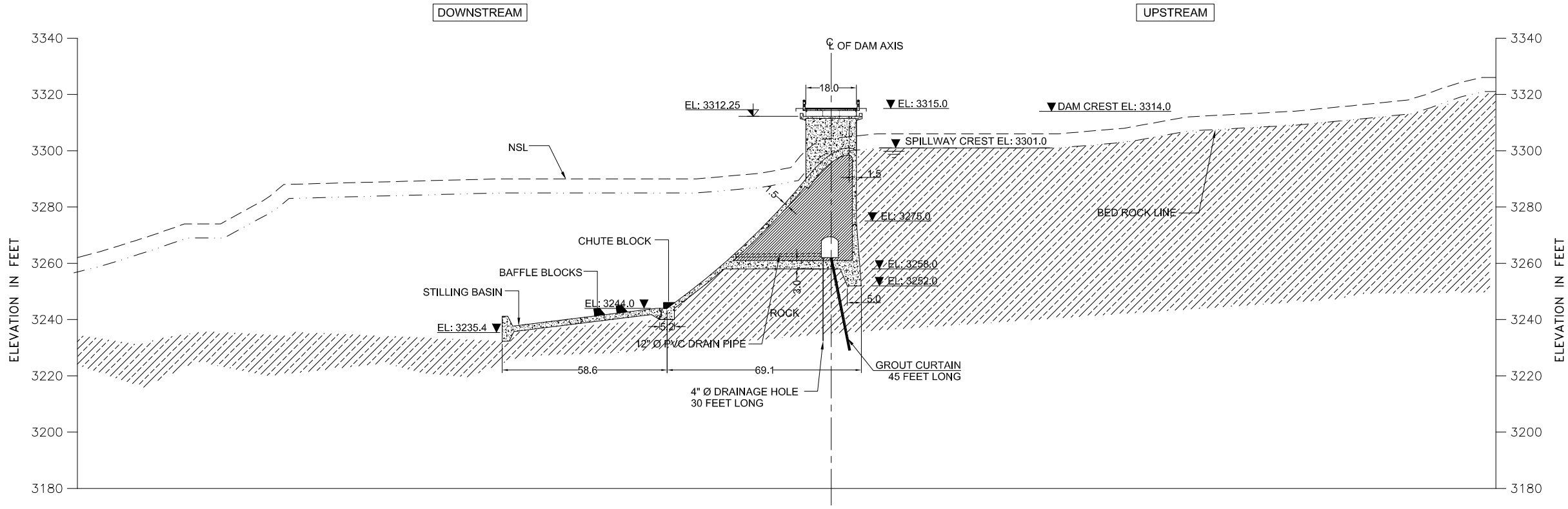

NOTE:

1. ALL DIMENSIONS ARE IN FEET.

SMALL DAMS ORGANIZATION GOVERNMENT OF KHYBER PAKHTUNKHWA	BARQAAB CONSULTING SERVICES (PVT)LIMITED LAHORE	SANAM DAM PROJECT LOWER DIR			DRAWN	IMTIAZ AHMED	**SPILLWAY CROSS SECTIONS RD 1+100 & 1+125**
					CHECKED	MANZAR MUMTAZ	
					SUBMITTED	MANZAR MUMTAZ	DATE: April, 2018 / DRAWING NO. **BQB-SDP-SP-09**
			REV.	DATE	APPROVED	M.T.A	

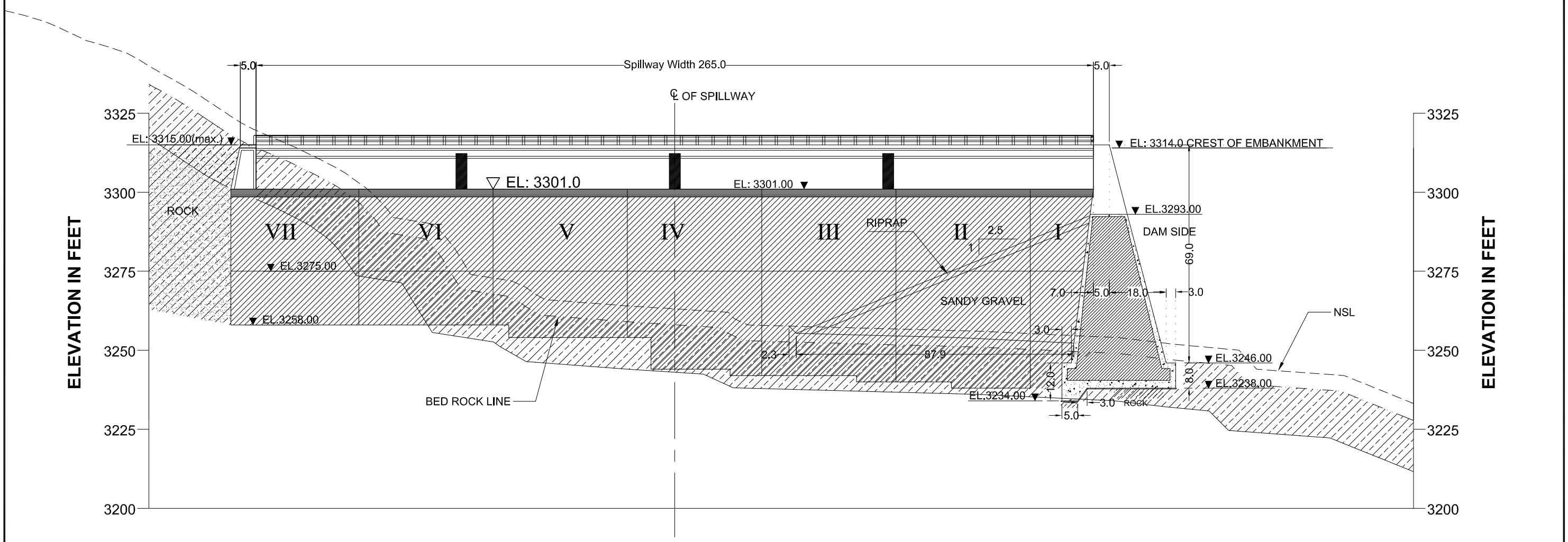

NOTES:-

1. **ALL DIMENSIONS ARE IN FEET**
2. **FOR LOCATION REF. DWG. NO. BQB-SDP-SP-02**

0 25 50 75 FEET

SCALE: 1"=25 Feet

SMALL DAMS ORGANIZATION GOVERNMENT OF KHYBER PAKHTUNKHWA	BARQAAB CONSULTING SERVICES (PVT)LIMITED LAHORE	SANAM DAM PROJECT LOWER DIR			DRAWN	IMTIAZ AHMED	**SPILLWAY CROSS SECTION X-SEC-1**
					CHECKED	MANZAR MUMTAZ	
					SUBMITTED	MANZAR MUMTAZ	DATE: April, 2018 / DRAWING NO. **BQB-SDP-SP-10**
			REV.	DATE	APPROVED	M.T.A	
				DESCRIPTION			

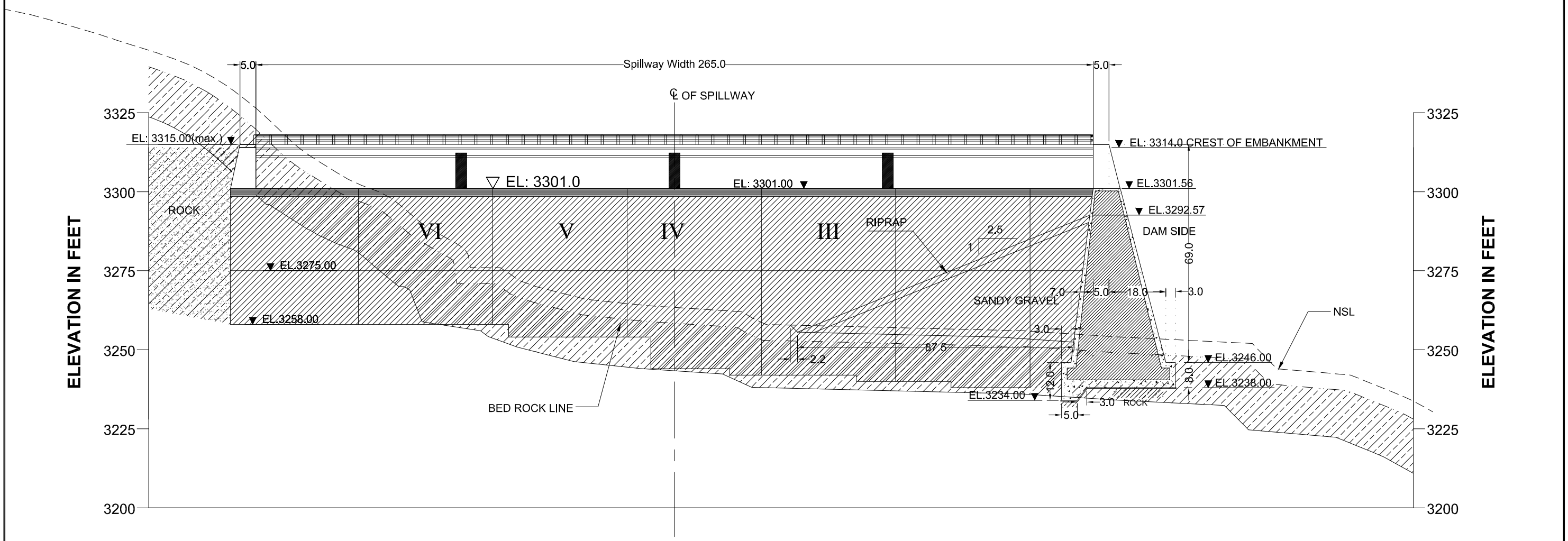

NOTES:-

1. **ALL DIMENSIONS ARE IN FEET**
2. **FOR LOCATION REF. DWG. NO. BQB-SDP-SP-02**

0 25 50 75 FEET

SCALE: 1"=25 Feet

SMALL DAMS ORGANIZATION GOVERNMENT OF KHYBER PAKHTUNKHWA	BARQAAB CONSULTING SERVICES (PVT)LIMITED LAHORE	SANAM DAM PROJECT LOWER DIR			DRAWN	IMTIAZ AHMED	**SPILLWAY CROSS SECTION X-SEC-2**
					CHECKED	MANZAR MUMTAZ	
					SUBMITTED	MANZAR MUMTAZ	DATE: April, 2018 / DRAWING NO. **BQB-SDP-SP-11**
			REV.	DATE	APPROVED	M.T.A	

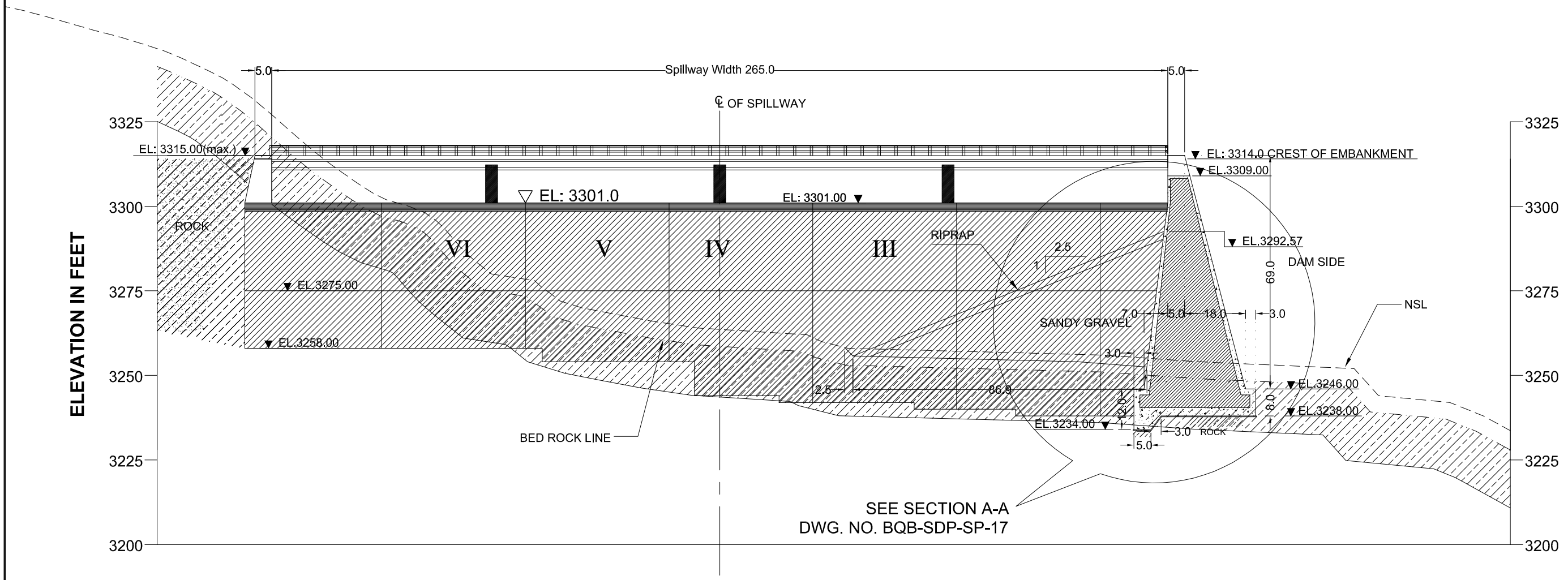

NOTES:-

1. **ALL DIMENSIONS ARE IN FEET**
2. **FOR LOCATION REF. DWG. NO. BQB-SDP-SP-02**

0 25 50 75 FEET

SCALE: 1"=25 Feet

SMALL DAMS ORGANIZATION GOVERNMENT OF KHYBER PAKHTUNKHWA	BARQAAB CONSULTING SERVICES (PVT)LIMITED LAHORE	SANAM DAM PROJECT LOWER DIR			DRAWN	IMTIAZ AHMED	**SPILLWAY CROSS SECTION X-SEC-3**
					CHECKED	MANZAR MUMTAZ	
					SUBMITTED	MANZAR MUMTAZ	DATE: April, 2018 / DRAWING NO. **BQB-SDP-SP-12**
			REV.	DATE	APPROVED	M.T.A	

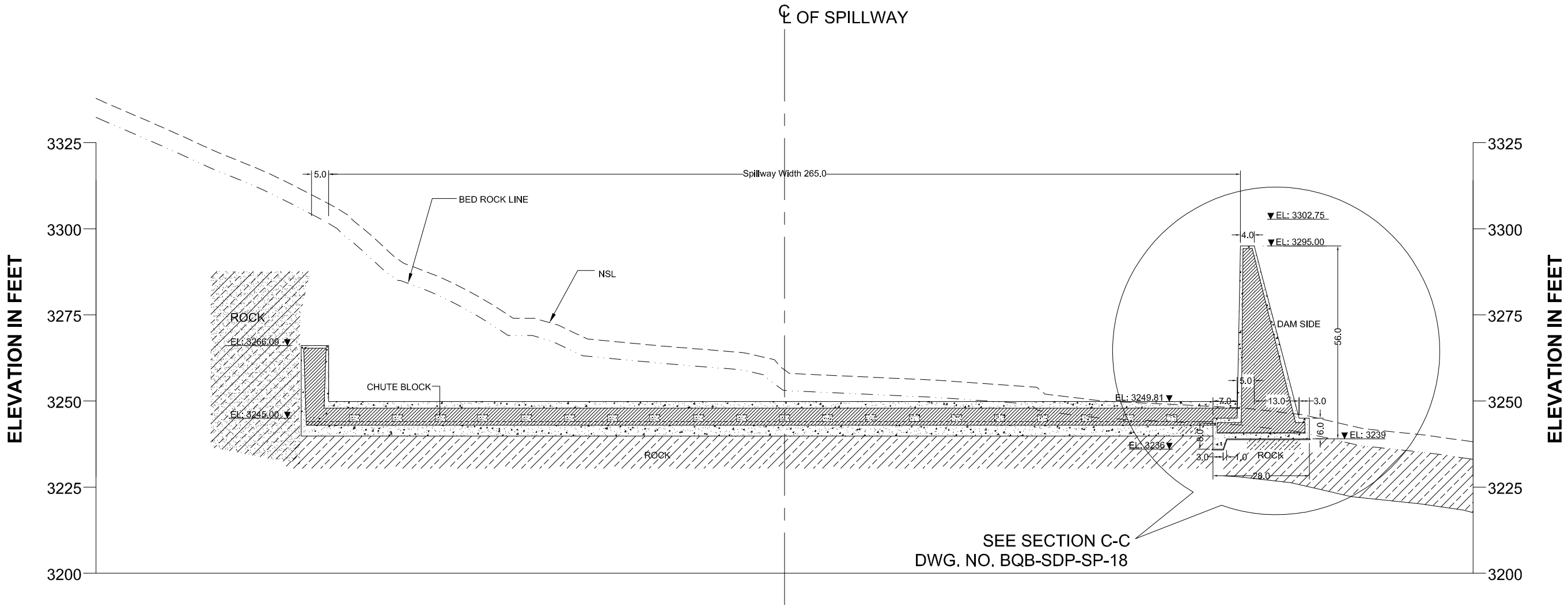

NOTES:-

1. **ALL DIMENSIONS ARE IN FEET**
2. **FOR LOCATION REF. DWG. NO. BQB-SDP-SP-02**

0 25 50 75 FEET

SCALE: 1"=25 Feet

SMALL DAMS ORGANIZATION GOVERNMENT OF KHYBER PAKHTUNKHWA	BARQAAB CONSULTING SERVICES (PVT)LIMITED LAHORE	SANAM DAM PROJECT LOWER DIR			DRAWN	IMTIAZ AHMED	**SPILLWAY CROSS SECTION X-SEC-4**
					CHECKED	MANZAR MUMTAZ	
					SUBMITTED	MANZAR MUMTAZ	DATE: April, 2018 / DRAWING NO. **BQB-SDP-SP-13**
			REV.	DATE	APPROVED	M.T.A	

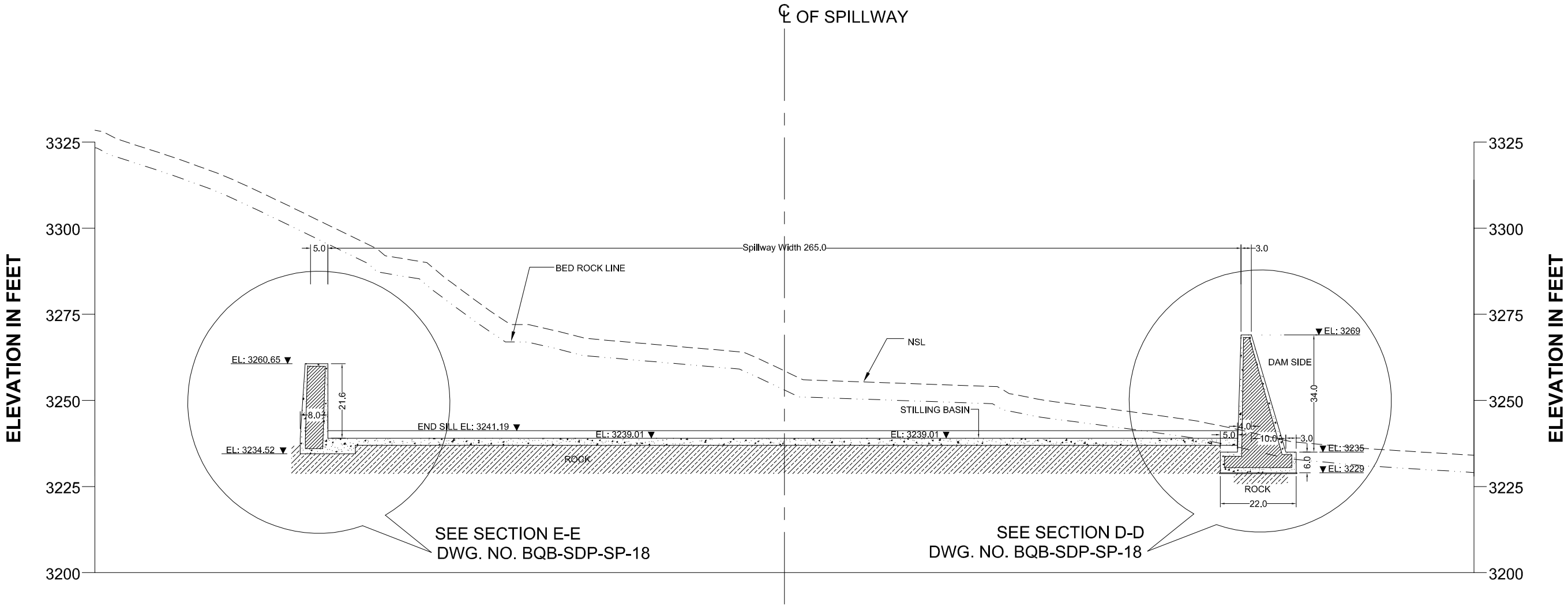

NOTES:-

1. **ALL DIMENSIONS ARE IN FEET**
2. **FOR LOCATION REF. DWG. NO. BQB-SDP-SP-02**

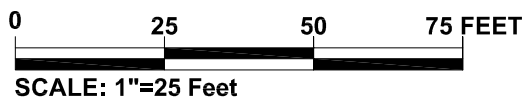

SMALL DAMS ORGANIZATION GOVERNMENT OF KHYBER PAKHTUNKHWA	BARQAAB CONSULTING SERVICES (PVT)LIMITED LAHORE	SANAM DAM PROJECT LOWER DIR			DRAWN	IMTIAZ AHMED	**SPILLWAY CROSS SECTION X-SEC-5**
					CHECKED	MANZAR MUMTAZ	
					SUBMITTED	MANZAR MUMTAZ	DATE: April, 2018 / DRAWING NO. **BQB-SDP-SP-14**
			REV.	DATE	APPROVED	M.T.A	
				DESCRIPTION			

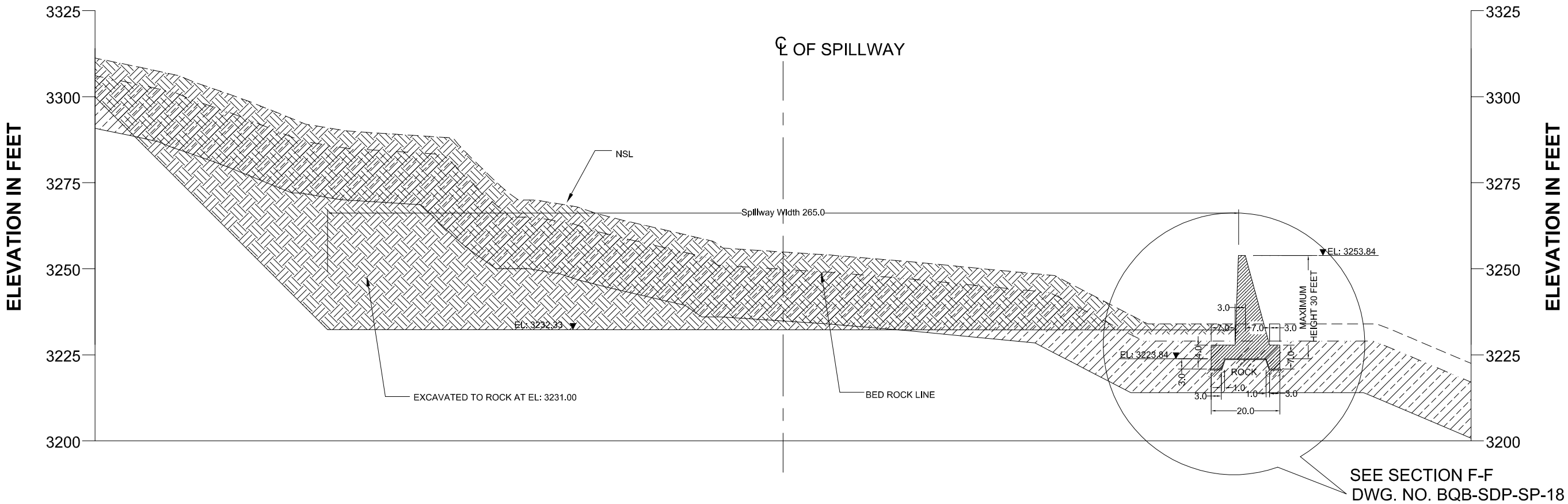

NOTES:-

1. **ALL DIMENSIONS ARE IN FEET**
2. **FOR LOCATION REF. DWG. NO. BQB-SDP-SP-02**

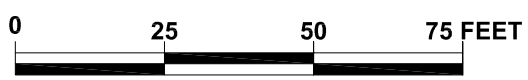

SCALE: 1"=25 Feet

SMALL DAMS ORGANIZATION GOVERNMENT OF KHYBER PAKHTUNKHWA	BARQAAB CONSULTING SERVICES (PVT)LIMITED LAHORE	SANAM DAM PROJECT LOWER DIR			DRAWN	IMTIAZ AHMED	**SPILLWAY CROSS SECTION X-SEC-6**
					CHECKED	MANZAR MUMTAZ	
					SUBMITTED	MANZAR MUMTAZ	DATE: April, 2018 / DRAWING NO. **BQB-SDP-SP-15**
			REV.	DATE	APPROVED	M.T.A	
				DESCRIPTION			

GENERAL NOTES FOR SPILLWAY, OUTLET STRUCTURE, BRIDGE

1. ALL DIMENSIONS ARE IN FEET AND INCHES.
2. ALL THE SITE DATA (LEVELS,ALIGNMENT, RDs, EXISTING FEATURES, ETC.) SHALL BE CHECKED BEFORE CONSTRUCTION.
3. ALL THE WORK SHALL BE CARRIED OUT AS PER SPECIFICATIONS.
4. THE ORDINARY PORTLAND CEMENT SHALL BE USED FOR ALL CONCRETE WORK.
5. CONCRETE STRENGTH FOR VARIOUS STRUCTURES SHALL BE AS MENTIONS IN THE RELEVANT DRAWINGS.
6. ALL REINFORCEMENT SHALL BE DEFORMED STEEL BARS HAVING A MINIMUM YIELD STRENGTH OF 40,000 PSI (276 MPa) UNLESS 60,000 PSI (414 MPa) STEEL IS MENTIONED. TESTS SHALL BE CARRIED OUT AS PER A.S.T.M. STANDARDS.
7. EXPANSION, CONTRACTION AND CONSTRUCTION JOINTS WILL COMPLY WITH IN DETAILS SHOWN.
8. ALL STEEL SURFACES, PARTS, MEMBERS ETC. EXPOSED TO WATER OR ATMOSPHERE SHALL BE PAINTED OR GALVANIZED AS DIRECTED BY THE ENGINEER.
9. THE EARTHWORK AT THE STRUCTURES SHALL BE ADJUSTED/DRESSED AS PER SITE CONDITIONS, AS INSTRUCTED BY THE ENGINEER.
10. UNLESS OTHERWISE SHOWN, PLACE ALL REINFORCEMENT SO THAT THE CLEAR DISTANCE BETWEEN FACE OF CONCRETE AND NEAREST REINFORCEMENT (STIRRUPS, TIES, SPIRALS OR OUTER MOST LAYER OF BARS) IS AS:

DECK SLAB (BRIDGE)	1"
PIERS	3”
WATER RETAINING COMPONENTS	3”
CONCRETE PLACED AGAINST EARTH	3”
RETAINING WALLS/SPILLWAY CHUTE/STILLING BASIN	2½"
APPROACH WALL, INTAKE STRUCTURE	4"

11. THE REINFORCEMENT BARS SHALL BE OVER-LAPPED, WHERE-EVER REQUIRED IN VIEW OF THE SITE SITUATION, AS DETERMINED BY THE ENGINEER. THE LAP LENGTHS IN DEFORMED BARS SHALL BE AS:-

BAR DIA	LAP LENGTH (INCHES) 40,000 PSI STEEL
#10	88
# 9	78
# 8	55
# 6	31
# 4	18
# 3	14

EMBEDMENT LENGTHS IN DEFORMED BARS SHALL BE AS:-

BAR DIA	EMBEDMENT LENGTH (INCHES) 40,000 PSI STEEL
# 10	52
# 9	41
# 8	32
# 6	18
# 4	12
# 3	12

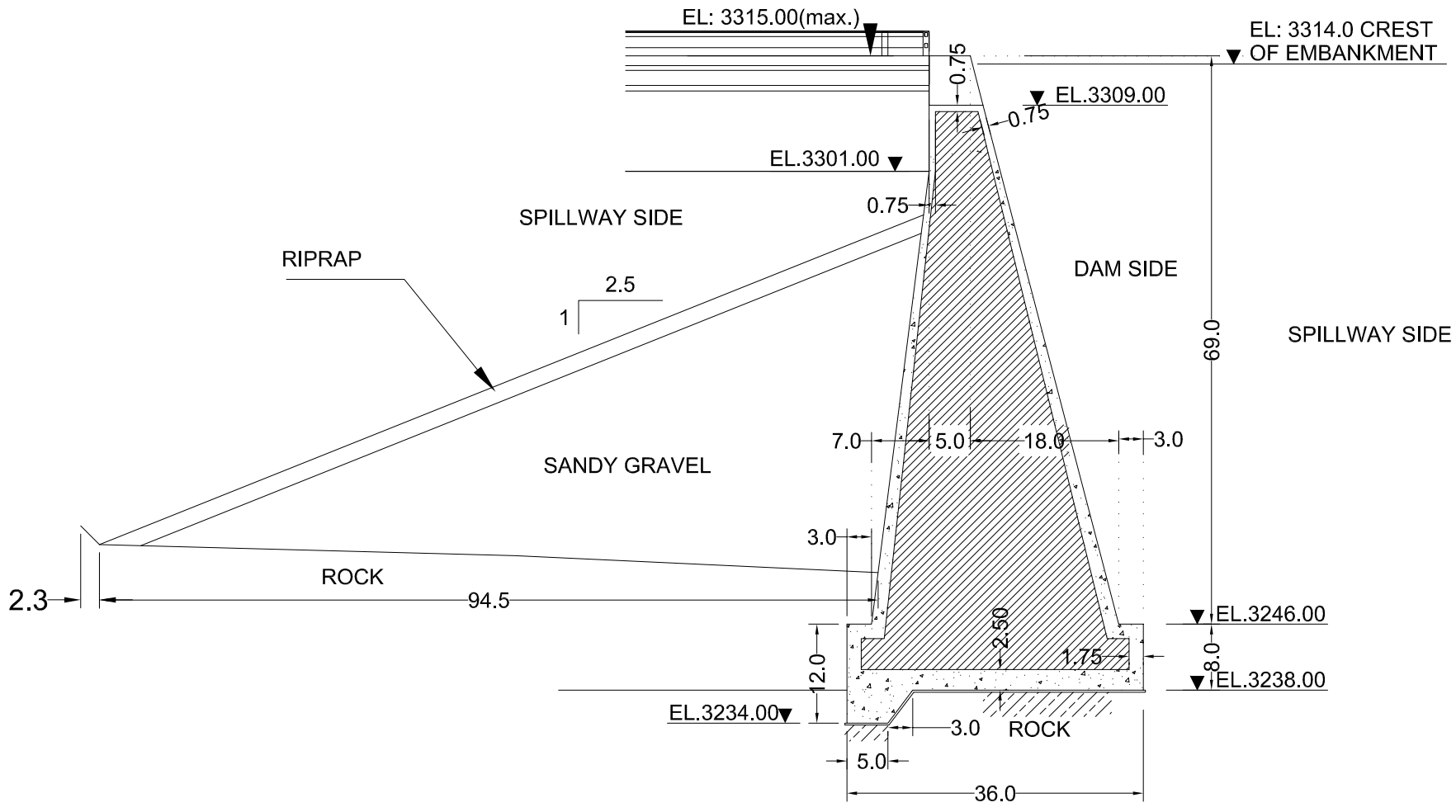

SECTION A-A

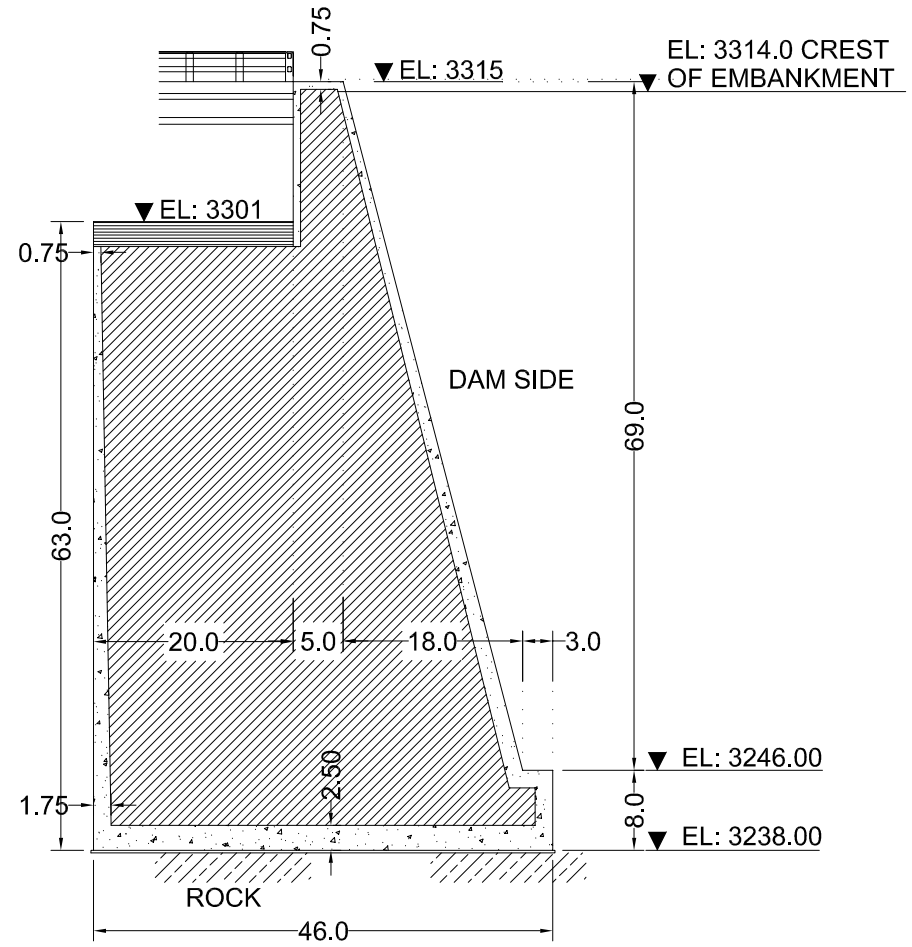

SECTION B-B

LEGEND

- Concrete (3000 Psi at 90 days)
- Concrete (3000 Psi at 28 days)
- Bed Rock

NOTES:-

1. **ALL DIMENSIONS ARE IN FEET**
2. **FOR LOCATION REF. DWG. NO. BQB-SDP-03 & 12**
3. **FOR REINFORCEMENT REF. DWG. NO. BQB-SDP-19,20**

0 25 50 75 FEET

SCALE: 1"=25 Feet

SMALL DAMS ORGANIZATION GOVERNMENT OF KHYBER PAKHTUNKHWA	BARQAAB CONSULTING SERVICES (PVT)LIMITED LAHORE	SANAM DAM PROJECT LOWER DIR			DRAWN: IMTIAZ AHMED CHECKED: MANZAR MUMTAZ SUBMITTED: MANZAR MUMTAZ APPROVED: M.T.A	**CONCRETE OUTLINE SECTIONS** DATE: April, 2018 DRAWING NO. **BQB-SDP-SP-17**
			REV.	DATE	DESCRIPTION	

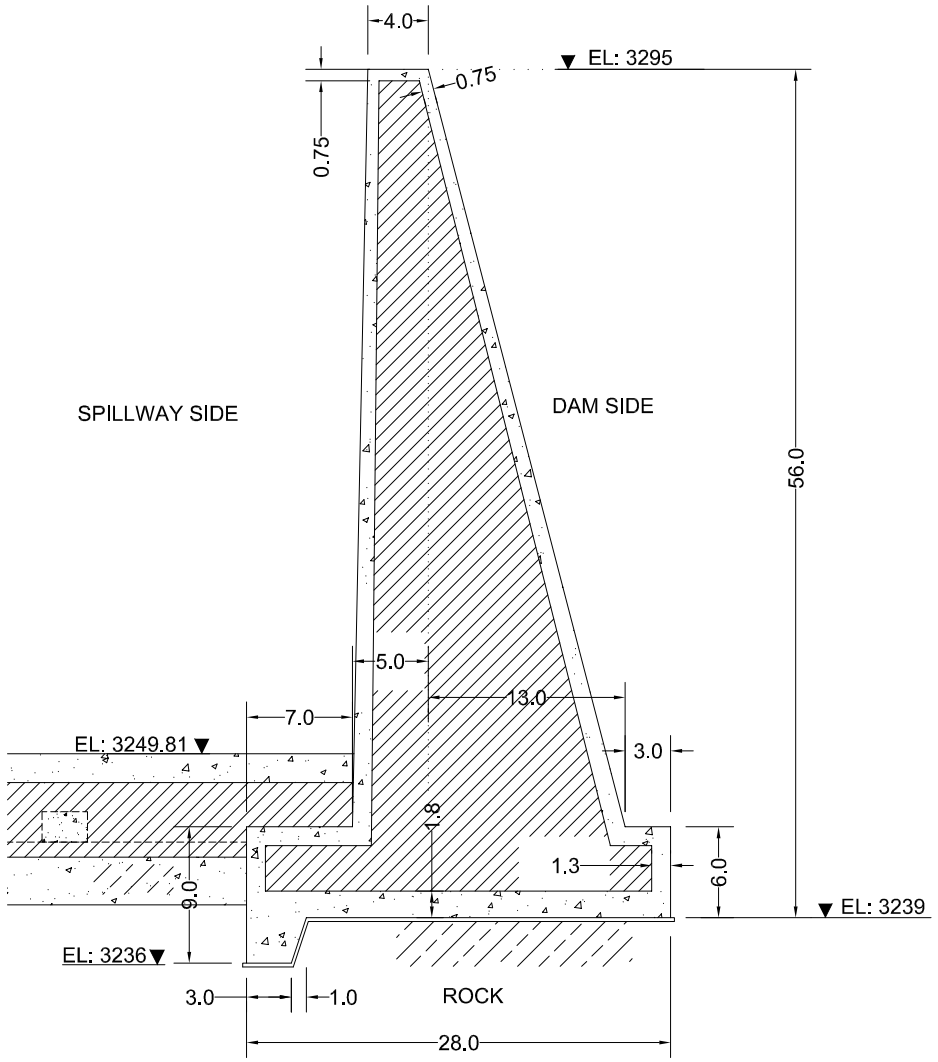

SECTION C-C

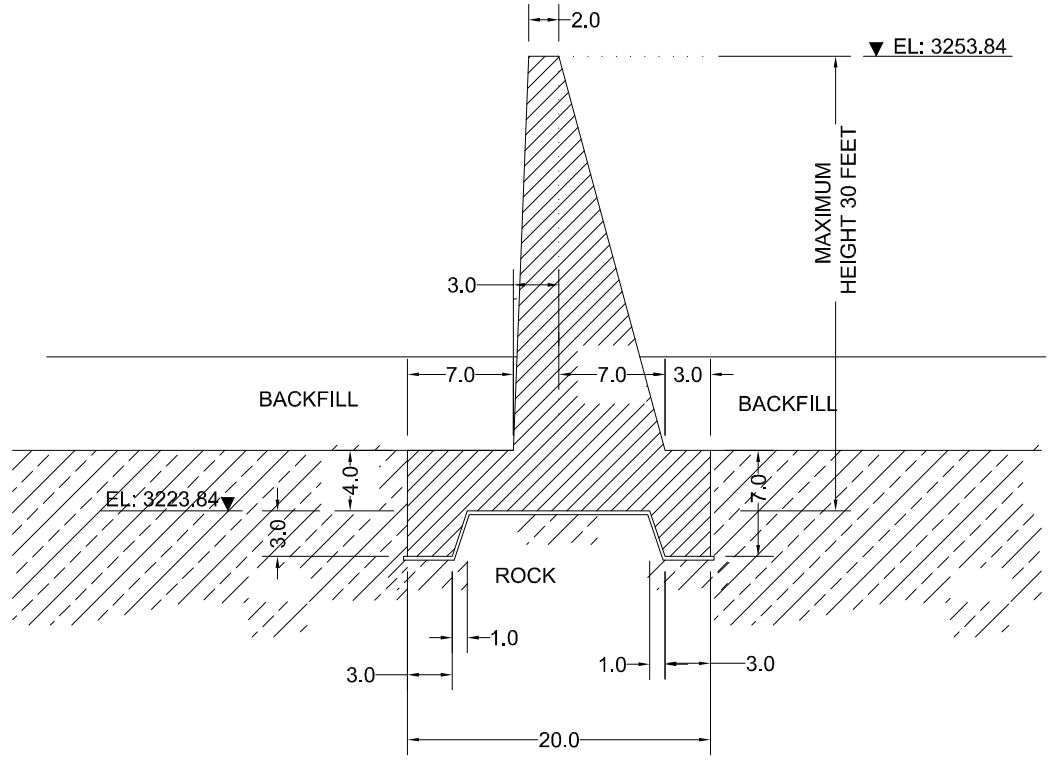

SECTION F-F

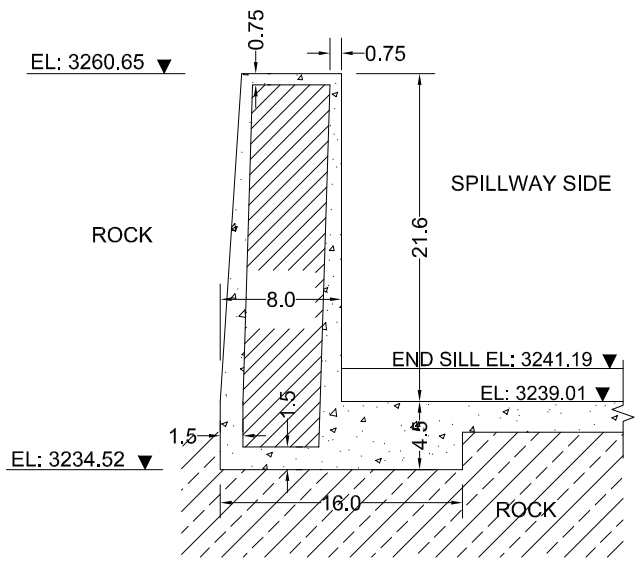

SECTION E-E

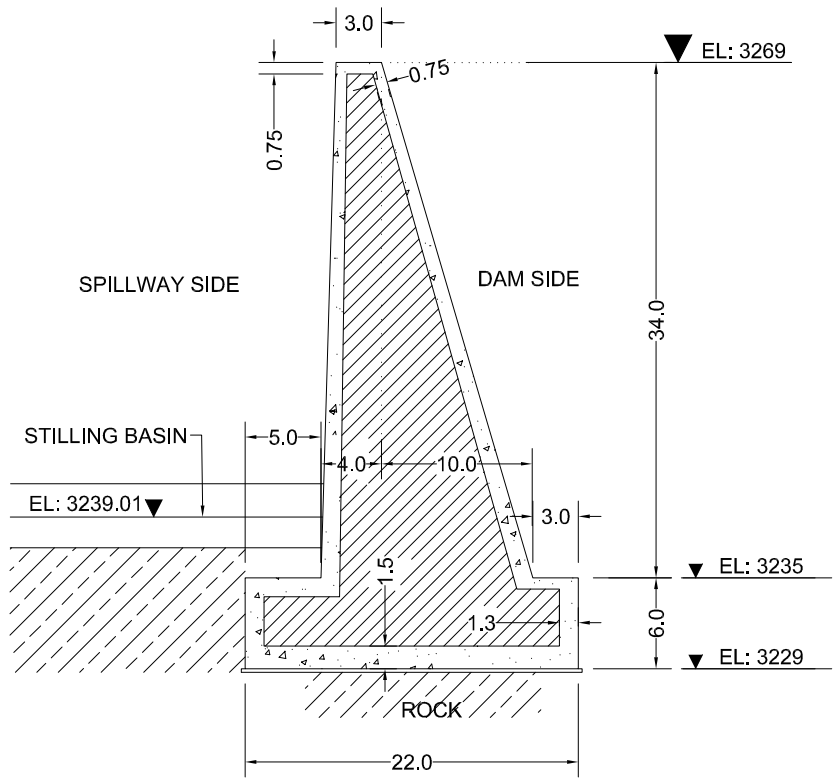

SECTION D-D

LEGEND

- Concrete (3000 Psi at 90 days)
- Concrete (3000 Psi at 28 days)
- Bed Rock

NOTES:-

1. **ALL DIMENSIONS ARE IN FEET**
2. **FOR LOCATION REF. DWG. NO. BQB-SDP-13 TO 15**
3. **FOR REINFORCEMENT REF. DWG. NO. BQB-SDP-19,20**

0 25 50 75 FEET

SCALE: 1"=25 Feet

SMALL DAMS ORGANIZATION GOVERNMENT OF KHYBER PAKHTUNKHWA	BARQAAB CONSULTING SERVICES (PVT)LIMITED LAHORE	SANAM DAM PROJECT LOWER DIR		DRAWN	IMTIAZ AHMED	**CONCRETE OUTLINE SECTIONS**
				CHECKED	MANZAR MUMTAZ	
				SUBMITTED	MANZAR MUMTAZ	DATE: April, 2018 / DRAWING NO. **BQB-SDP-SP-18**
			REV. / DATE / DESCRIPTION	APPROVED	M.T.A	

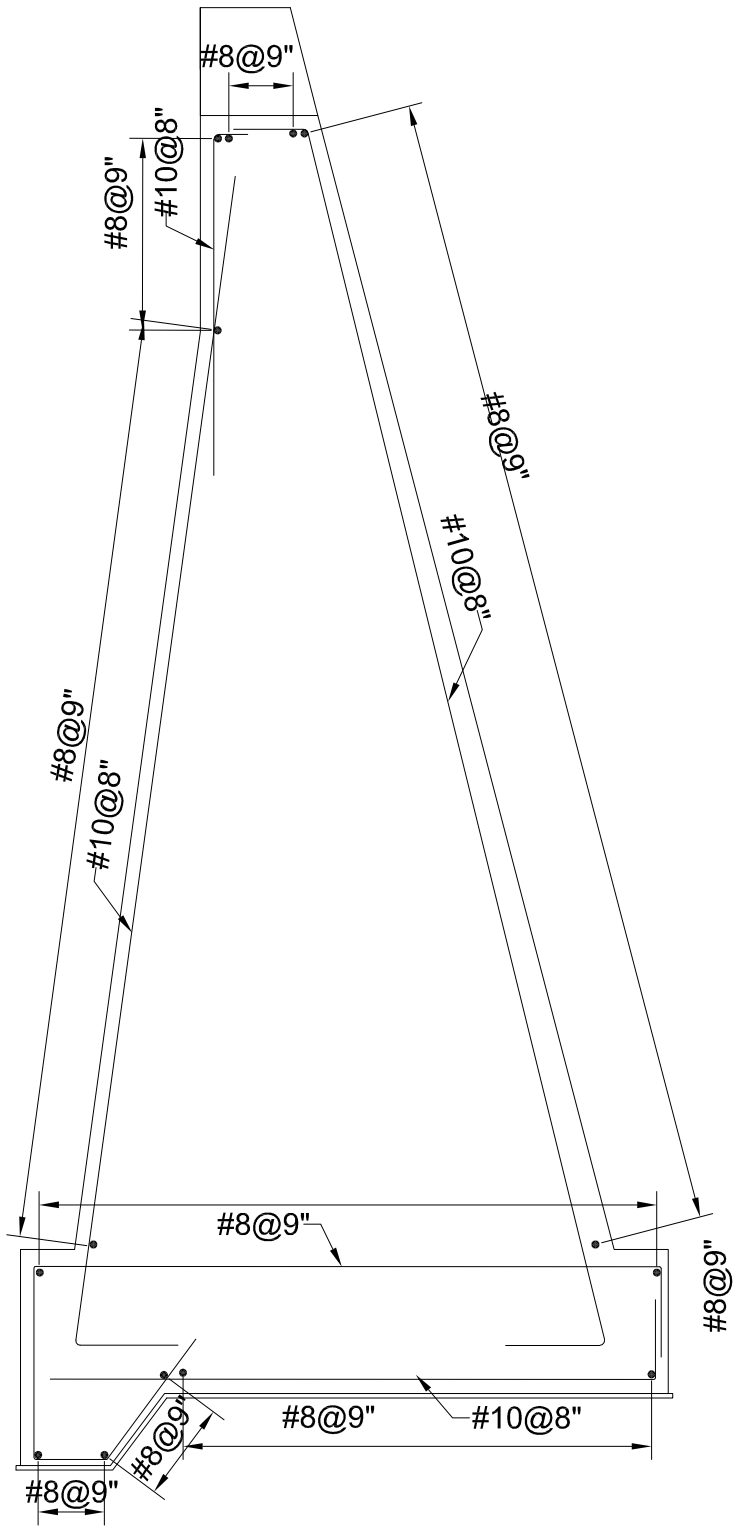

SECTION A-A
REINFORCEMENT

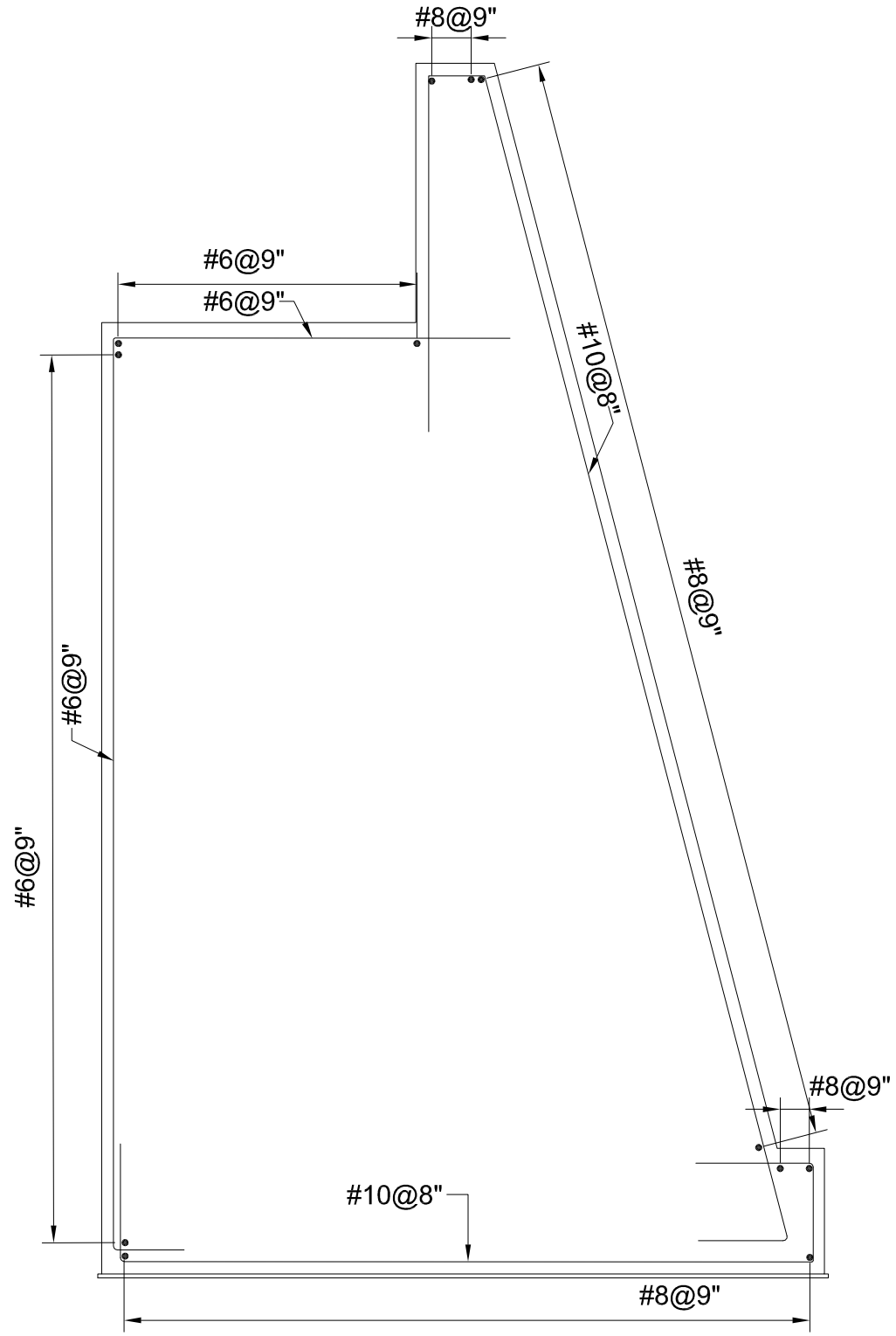

SECTION B-B
REINFORCEMENT

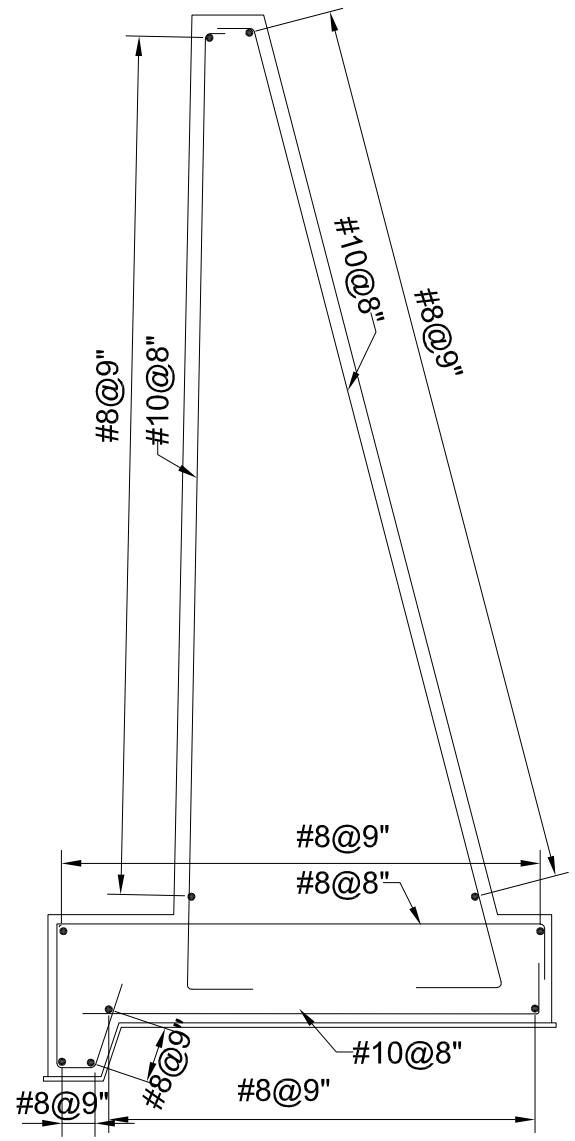

SECTION C-C
REINFORCEMENT

NOTES:-

1. **ALL DIMENSIONS ARE IN FEET**
2. **FOR GENERAL NOTES REF. DWG. NO. BQB-SDP-SP-16**

SMALL DAMS ORGANIZATION GOVERNMENT OF KHYBER PAKHTUNKHWA	BARQAAB CONSULTING SERVICES (PVT)LIMITED LAHORE	SANAM DAM PROJECT LOWER DIR			DRAWN	IMTIAZ AHMED	**REINFORCEMENT SECTIONS**
					CHECKED	MANZAR MUMTAZ	
					SUBMITTED	MANZAR MUMTAZ	DATE: April, 2018 / DRAWING NO. **BQB-SDP-SP-19**
			REV.	DATE	APPROVED	M.T.A	
				DESCRIPTION			

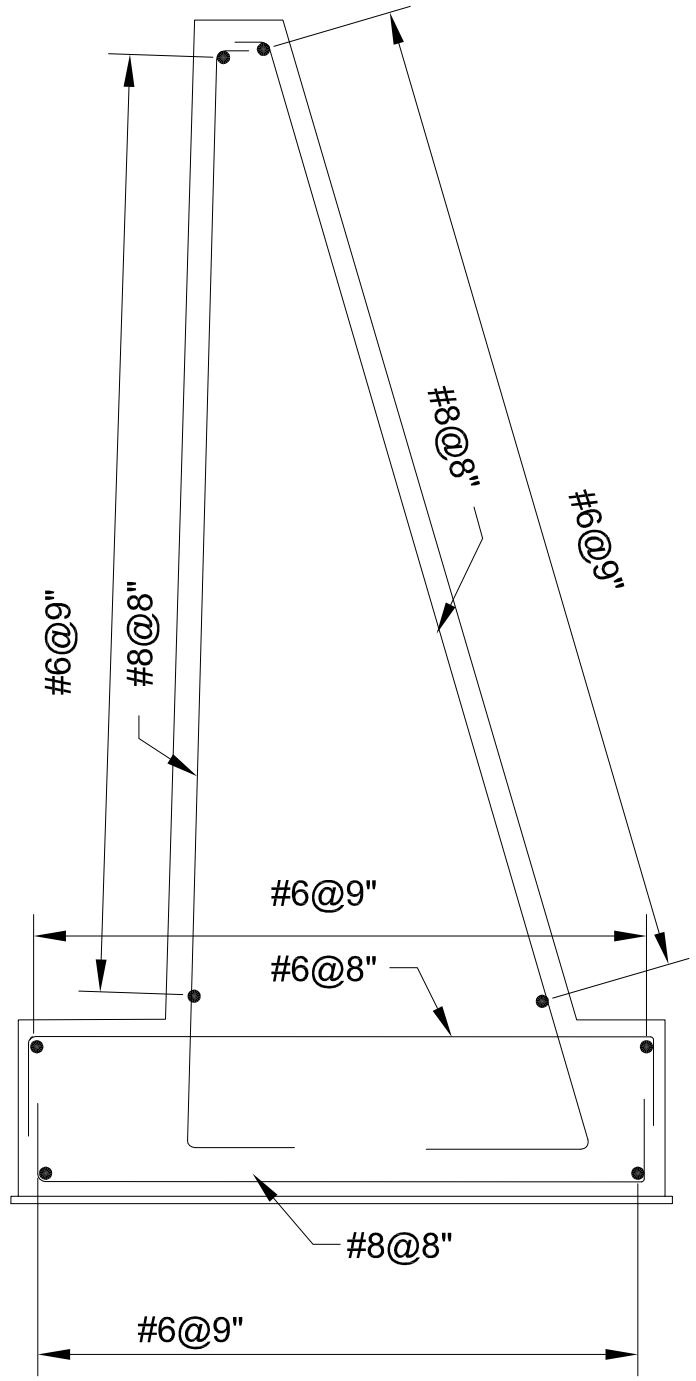

SECTION D-D
REINFORCEMENT

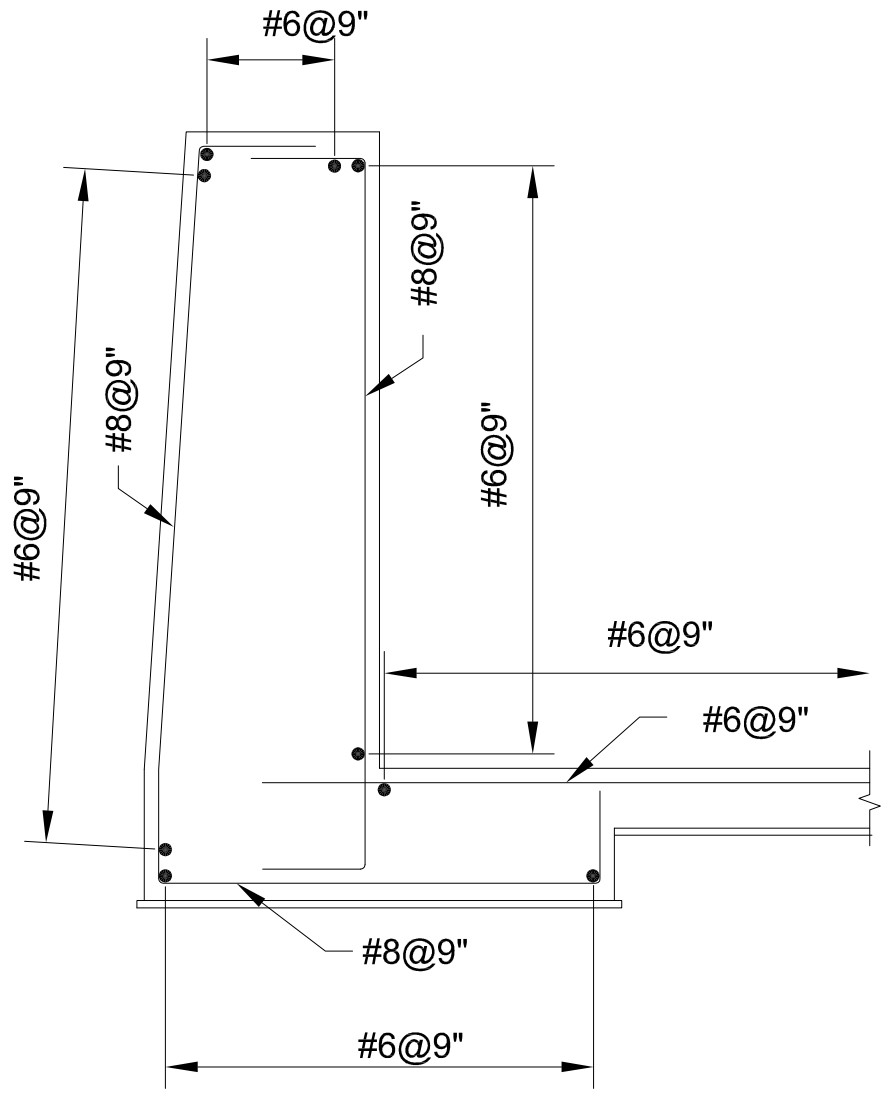

SECTION E-E
REINFORCEMENT

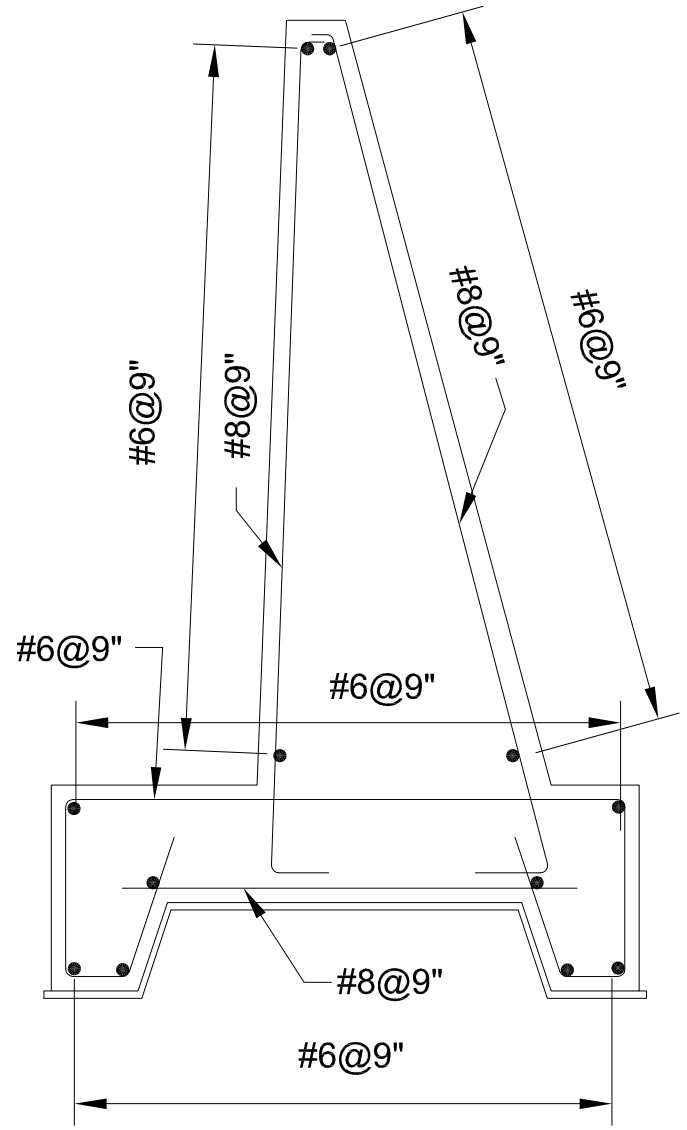

SECTION F-F
REINFORCEMENT

NOTES:-

1. **ALL DIMENSIONS ARE IN FEET**
2. **FOR GENERAL NOTES REF. DWG. NO. BQB-SDP-SP-16**

SMALL DAMS ORGANIZATION GOVERNMENT OF KHYBER PAKHTUNKHWA	BARQAAB CONSULTING SERVICES (PVT)LIMITED LAHORE	SANAM DAM PROJECT LOWER DIR			DRAWN	IMTIAZ AHMED	**REINFORCEMENT SECTIONS**
					CHECKED	MANZAR MUMTAZ	
					SUBMITTED	MANZAR MUMTAZ	DATE: April, 2018 / DRAWING NO. **BQB-SDP-SP-20**
			REV.	DATE	APPROVED	M.T.A	

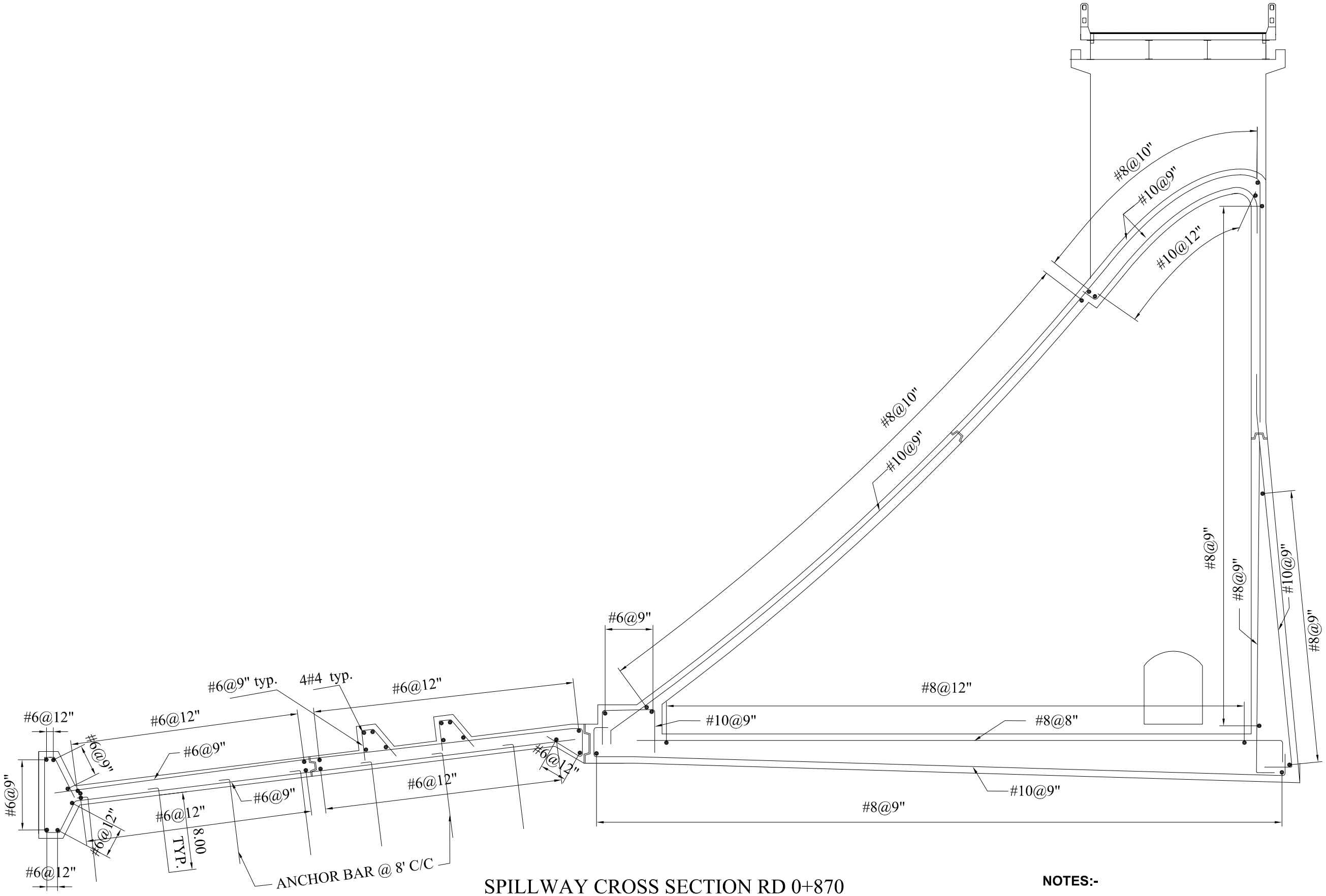

SPILLWAY CROSS SECTION RD 0+870
REINFORCEMENT

NOTES:-

1. **ALL DIMENSIONS ARE IN FEET**
2. **FOR GENERAL NOTES REF. DWG. NO. BQB-SDP-SP-16**

SMALL DAMS ORGANIZATION GOVERNMENT OF KHYBER PAKHTUNKHWA	BARQAAB CONSULTING SERVICES (PVT)LIMITED LAHORE	SANAM DAM PROJECT LOWER DIR			DRAWN	IMTIAZ	**SPILLWAY & STILLING BASIN REINFORCEMENT**
					CHECKED	TANVIR ABBAS	
					SUBMITTED	TANVIR ABBAS	DATE: May, 2018 / DRAWING NO. **BQB-SDP-SP-21**
			REV.	DATE	APPROVED	M.T.A	
				DESCRIPTION			

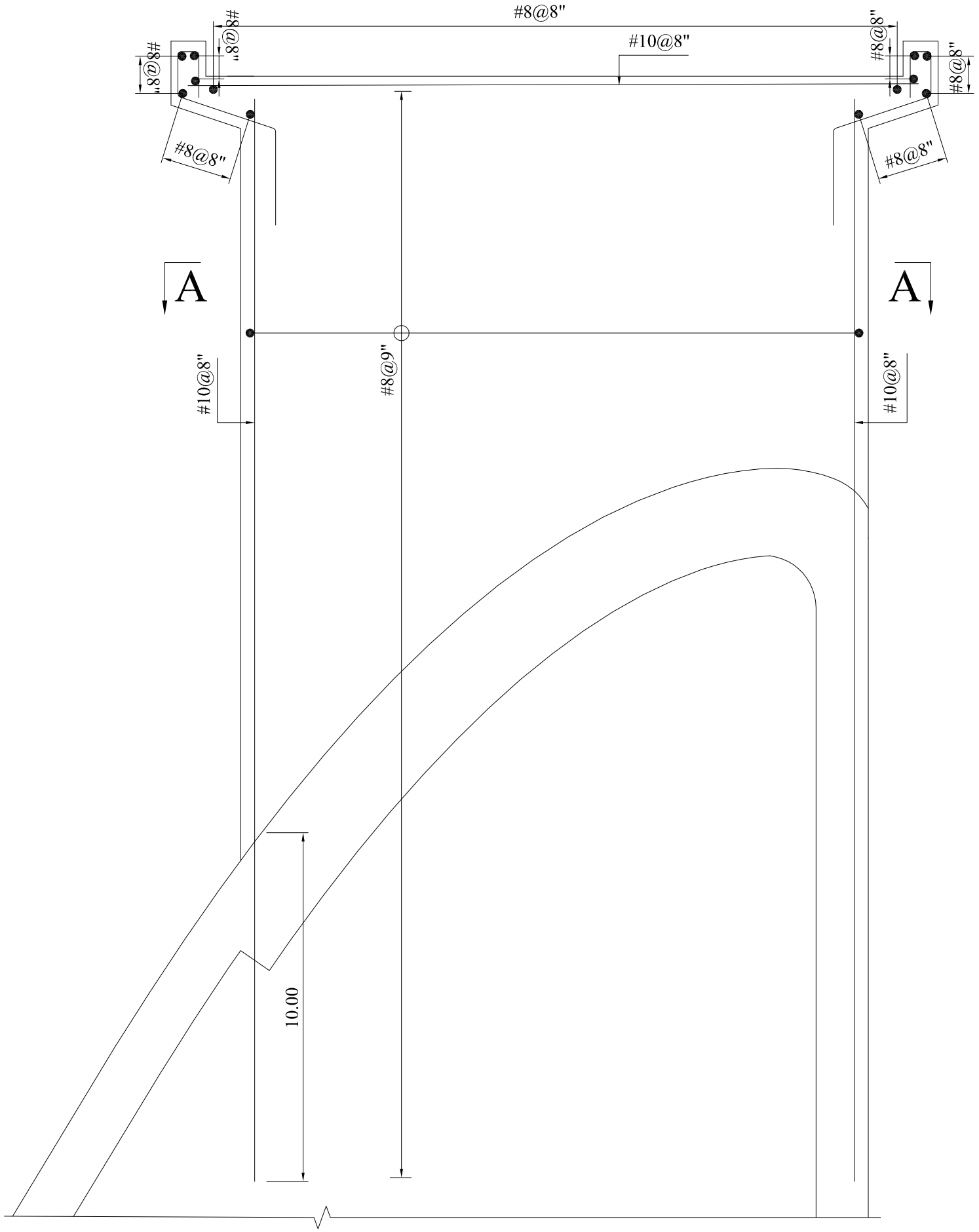

TYPICAL SECTION OF PIER

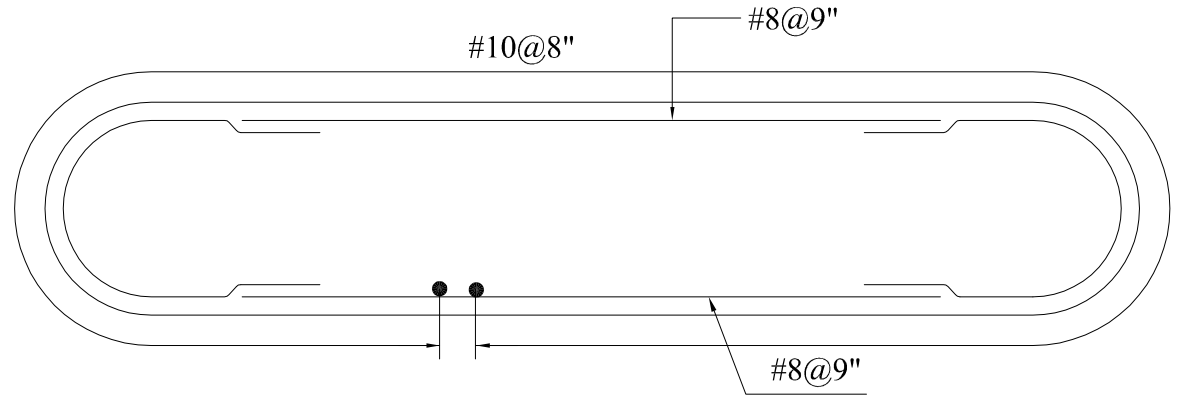

SECTION A-A

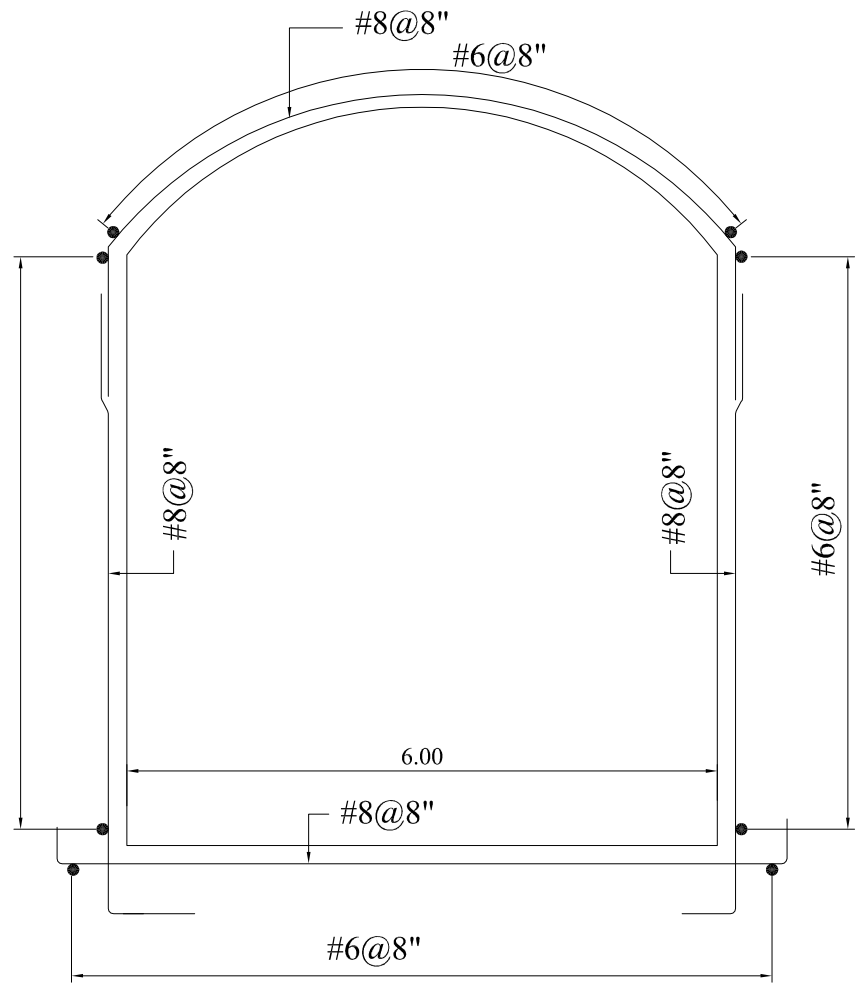

GALLERY SECTION
(REINFORCEMENT)

NOTES:-

1. **ALL DIMENSIONS ARE IN FEET**
2. **FOR GENERAL NOTES REF. DWG. NO. BQB-SDP-SP-16**

SMALL DAMS ORGANIZATION GOVERNMENT OF KHYBER PAKHTUNKHWA	BARQAAB CONSULTING SERVICES (PVT)LIMITED LAHORE	SANAM DAM PROJECT LOWER DIR			DRAWN	IMTIAZ	**PIER & GALLERY REINFORCEMENT**
					CHECKED	TANVIR ABBAS	
					SUBMITTED	TANVIR ABBAS	DATE: May, 2018 / DRAWING NO. **BQB-SDP-SP-22**
			REV.	DATE	APPROVED	M.T.A	
				DESCRIPTION			

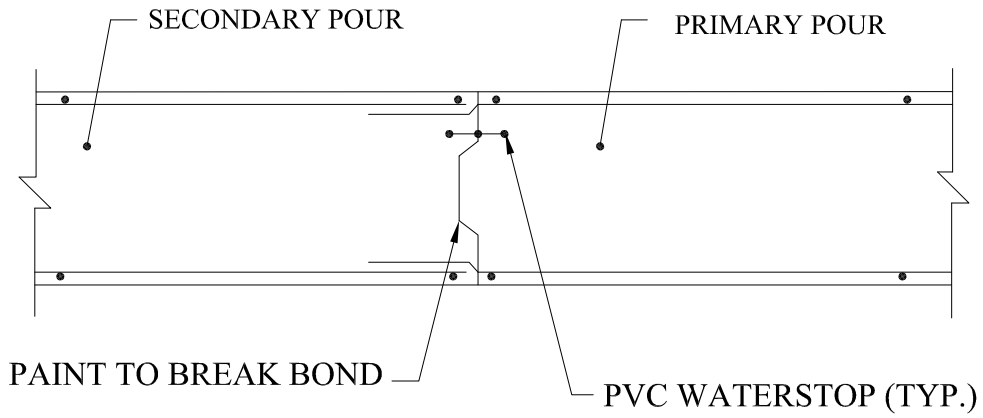

CONSTRUCTION JOINT (C. JT.)

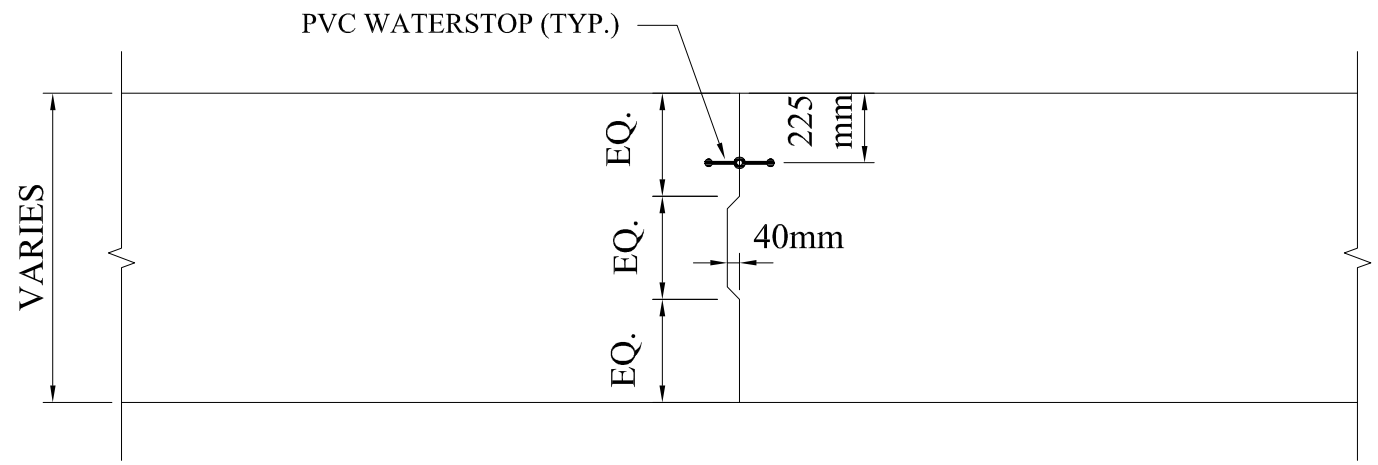

TYPICAL KEY DETAIL

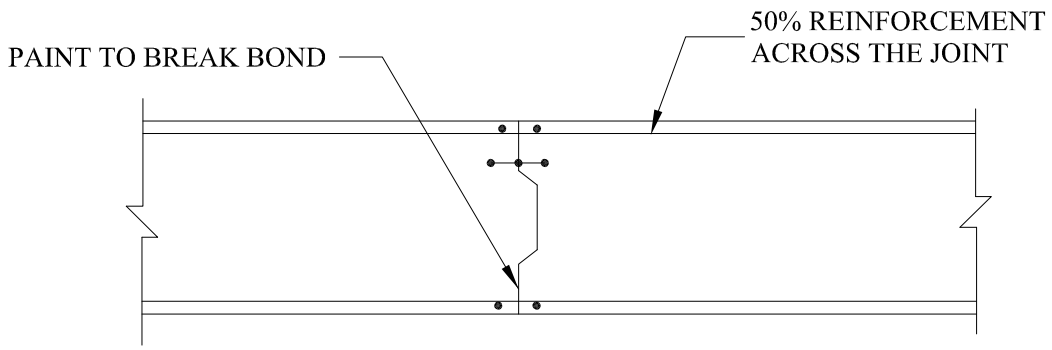

CONTRACTION JOINT
TYPE-1

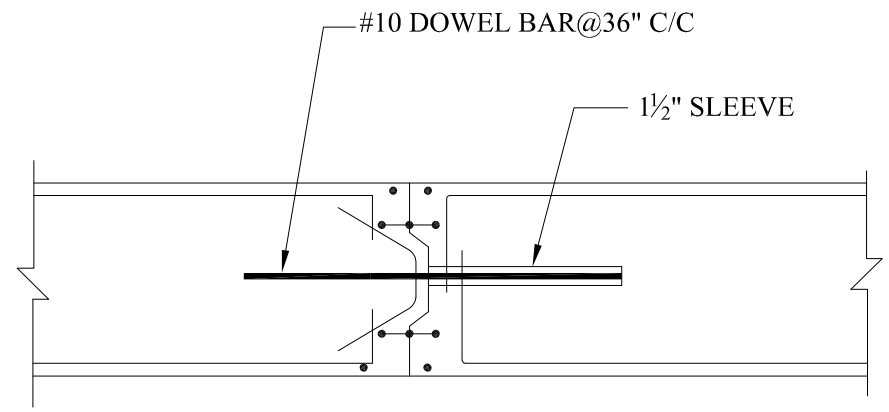

CONTRACTION JOINT
TYPE-2

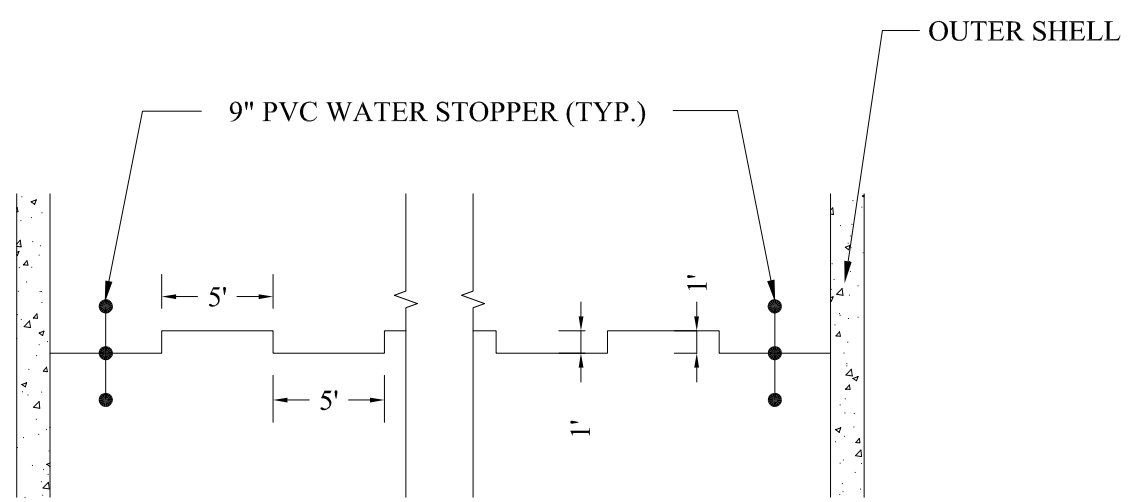

GROUTED, KEYED CONTRACTION JOINT WITH WATER
STOPPER IN SPILLWAY MASS CONCRETE

SMALL DAMS ORGANIZATION GOVERNMENT OF KHYBER PAKHTUNKHWA	BARQAAB CONSULTING SERVICES (PVT)LIMITED LAHORE	SANAM DAM PROJECT LOWER DIR			DRAWN	IMTIAZ AHMED	JOINT DETAILS
					CHECKED	MANZAR MUMTAZ	
					SUBMITTED	MANZAR MUMTAZ	DATE: May, 2018 / DRAWING NO. BQB-SDP-SP-23
			REV.	DATE	APPROVED	M.T.A	
				DESCRIPTION			

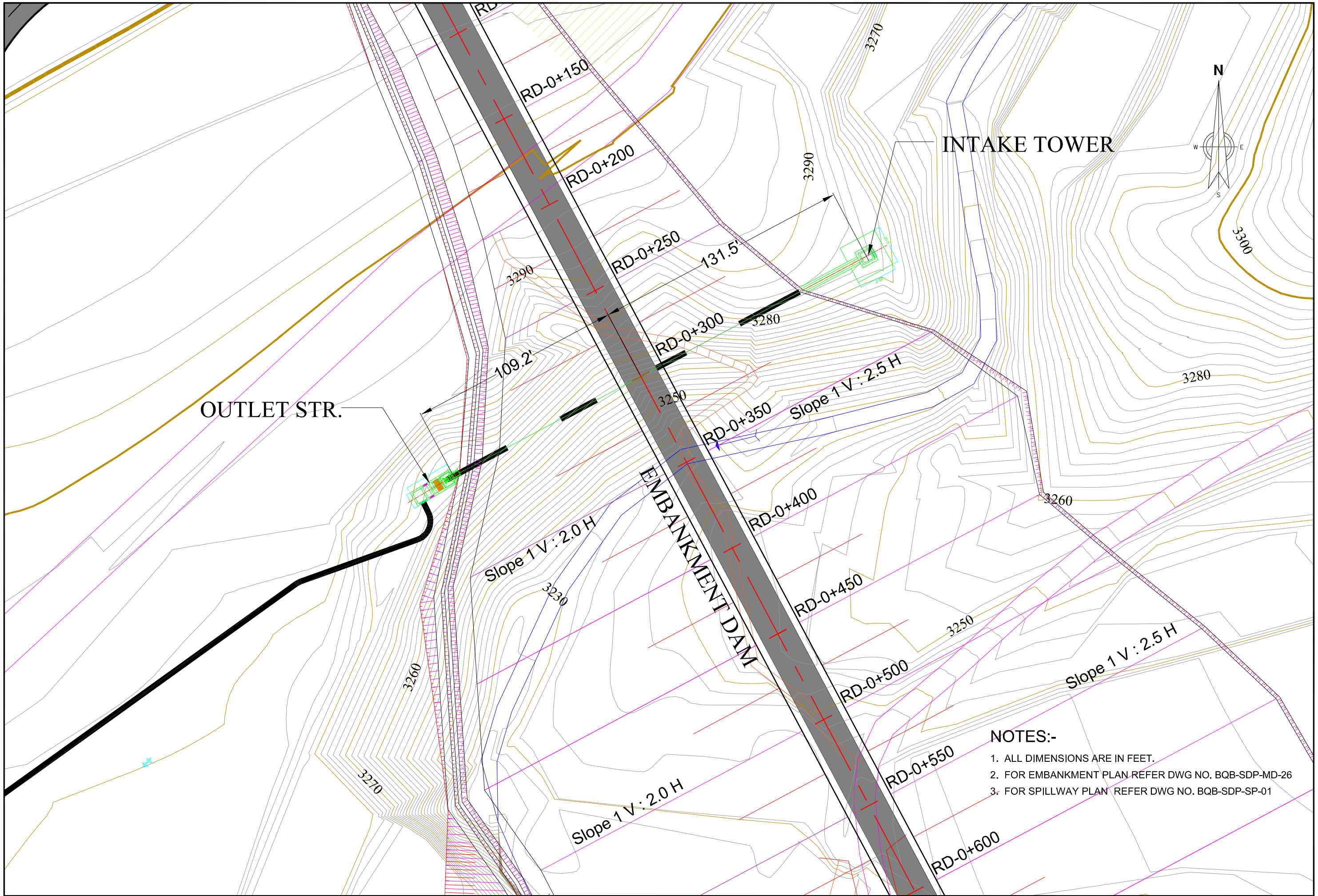

NOTES:-

1. ALL DIMENSIONS ARE IN FEET.
2. FOR EMBANKMENT PLAN REFER DWG NO. BQB-SDP-MD-26
3. FOR SPILLWAY PLAN REFER DWG NO. BQB-SDP-SP-01

SMALL DAMS ORGANIZATION GOVERNMENT OF KHYBER PAKHTUNKHWA	BARQAAB CONSULTING SERVICES (PVT)LIMITED LAHORE	SANAM DAM PROJECT LOWER DIR		DRAWN	IMTIAZ AHMED	INTAKE & OUTLET STRUCTURE LAYOUT PLAN
				CHECKED	MANZAR MUMTAZ	
				SUBMITTED	MANZAR MUMTAZ	DATE: April, 2018 / DRAWING NO. BQB-SDP-INT-01
			REV. / DATE / DESCRIPTION	APPROVED	M.T.A	

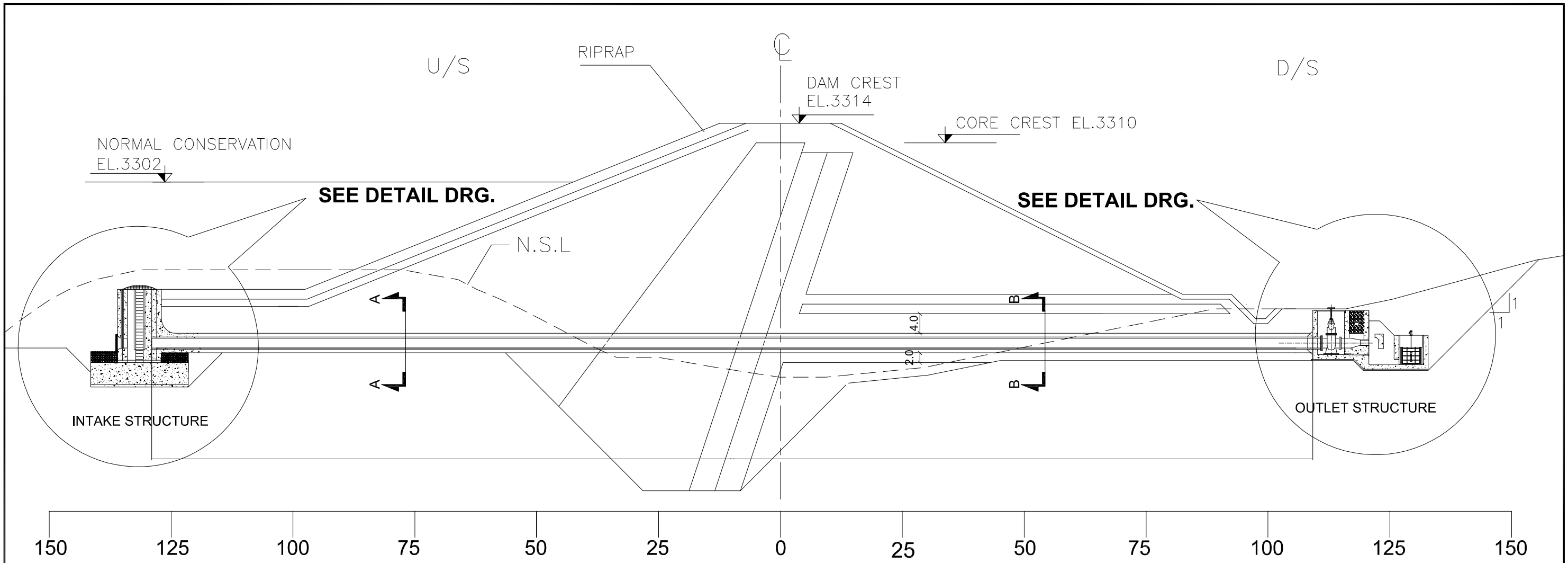

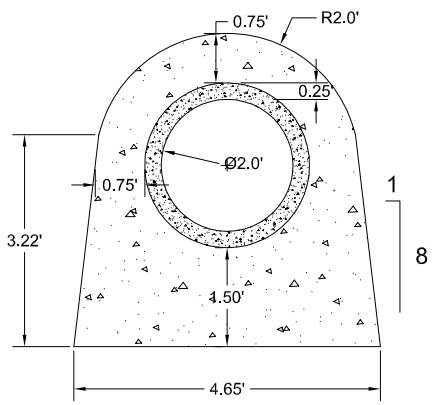

SECTION A-A

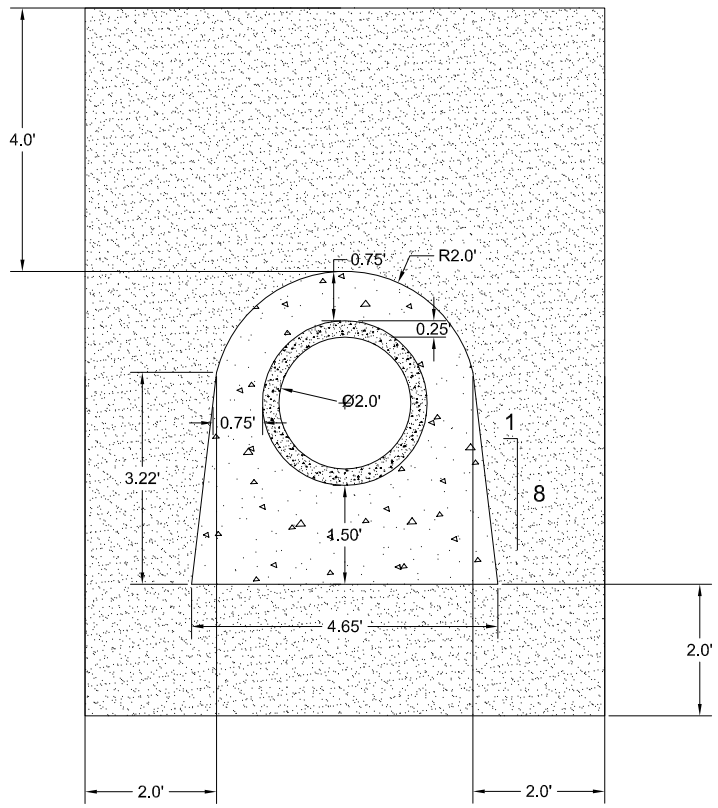

SECTION B-B

NOTES:-

1. **ALL DIMENSIONS ARE IN FEET**
2. **FOR LOCATION REF. DWG. NO. BQB-SDP-INT-01**
3. **DAM CORE SHOULD BE PLACED ON SOUND ROCK OR AS DIRECTED BY ENGINEER AT SITE**
4. **FILTER MATERIAL WILL REQUIRED PROCESSING /SCREENING FROM SUITABLE AVAILABLE MATERIAL AT SITE**

0 16 32 48 FEET

SCALE: 1"=16 Feet

SMALL DAMS ORGANIZATION GOVERNMENT OF KHYBER PAKHTUNKHWA	BARQAAB CONSULTING SERVICES (PVT)LIMITED LAHORE	SANAM DAM PROJECT LOWER DIR	DRAWN	IMTIAZ AHMED	**INTAKE & OUTLET STRUCTURE L-SECTION AT RD 0+300**
			CHECKED	MANZAR MUMTAZ	
			SUBMITTED	MANZAR MUMTAZ	DATE: April, 2018 / DRAWING NO. **BQB-SDP-INT-02**
		REV. DATE DESCRIPTION	APPROVED	M.T.A	

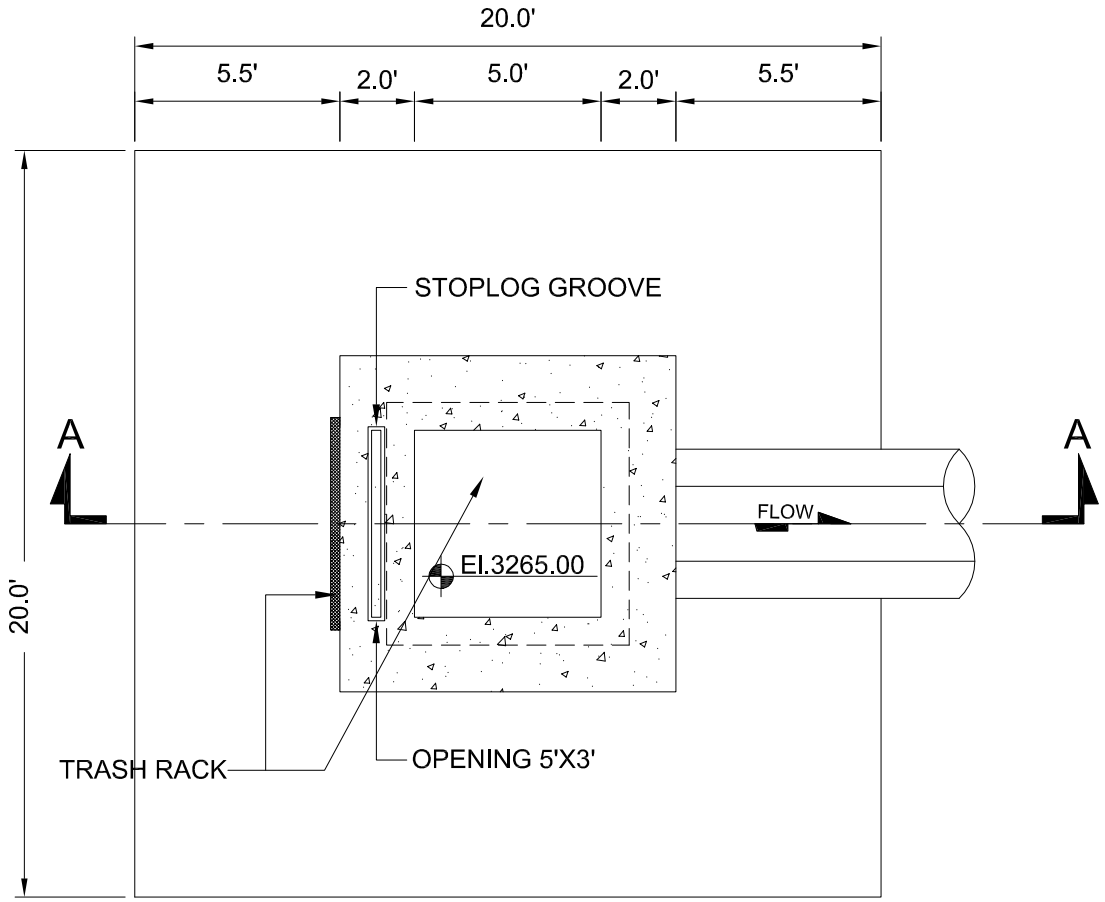

INTAKE STRUCTURE PLAN

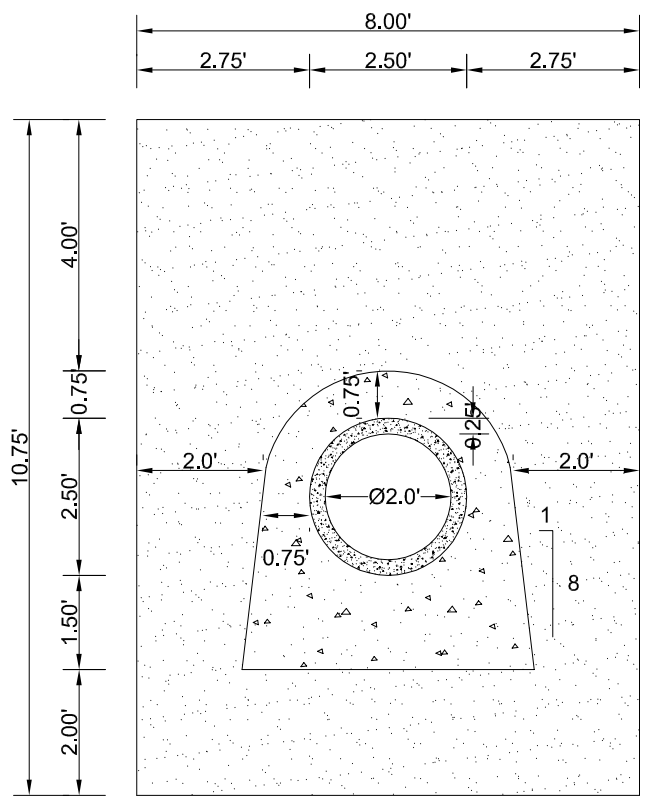

PIPE SECTION (TYP.)

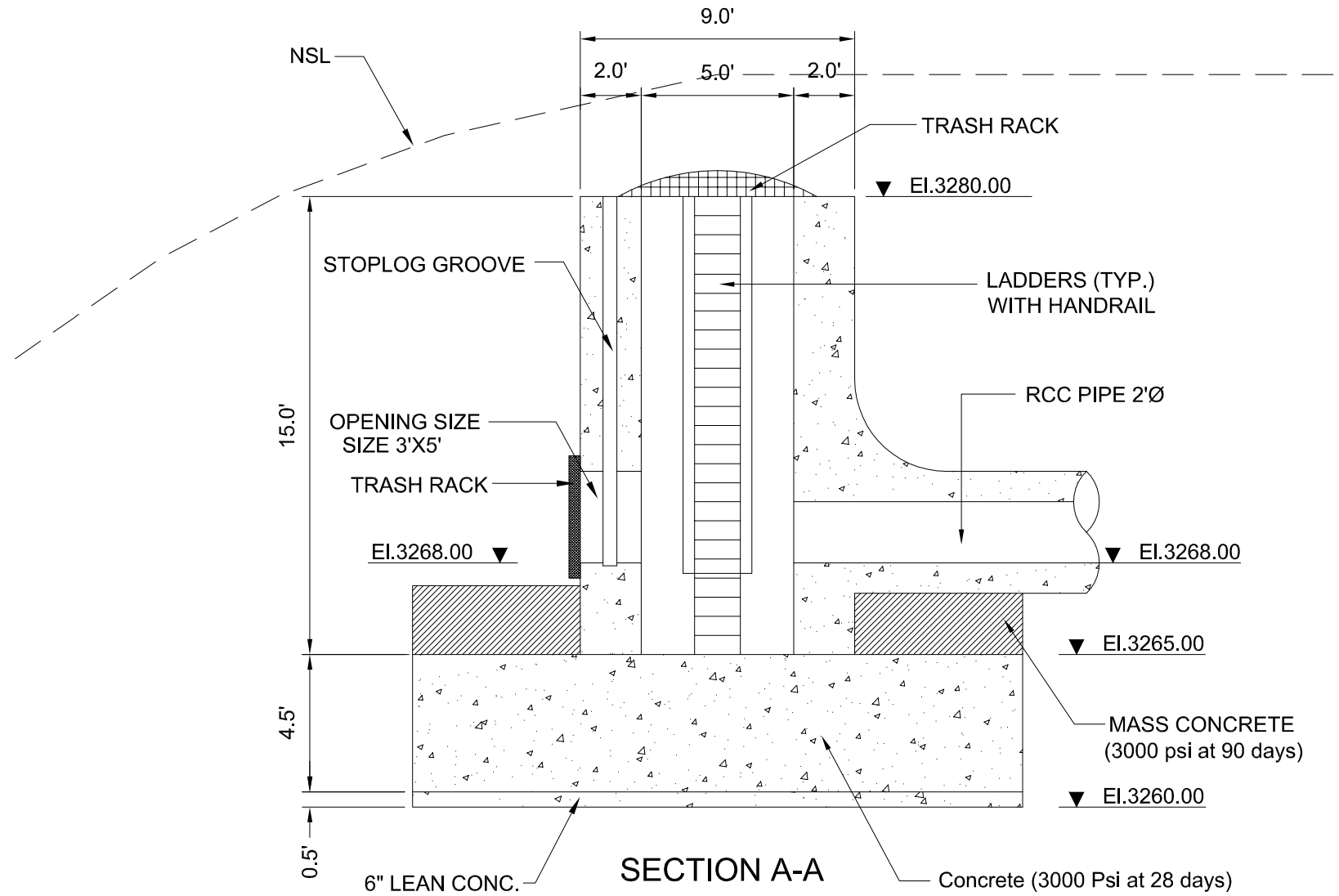

SECTION A-A

NOTES:-

1. **ALL DIMENSIONS ARE IN FEET**
2. **FOR LOCATION REF. DWG. NO. BQB-SDP-INT-01**

LEGEND

- Concrete (3000 Psi at 90 days)
- Concrete (3000 Psi at 28 days)
- Bed Rock

0 4 8 12 FEET

SCALE: 1"=4 Feet

SMALL DAMS ORGANIZATION GOVERNMENT OF KHYBER PAKHTUNKHWA	BARQAAB CONSULTING SERVICES (PVT)LIMITED LAHORE	SANAM DAM PROJECT LOWER DIR	DRAWN	IMTIAZ AHMED	**INTAKE STRUCTURE PLAN & SECTION**
			CHECKED	MANZAR MUMTAZ	
			SUBMITTED	MANZAR MUMTAZ	DATE: April, 2018 / DRAWING NO. **BQB-SDP-INT-03**
		REV. / DATE / DESCRIPTION	APPROVED	M.T.A	

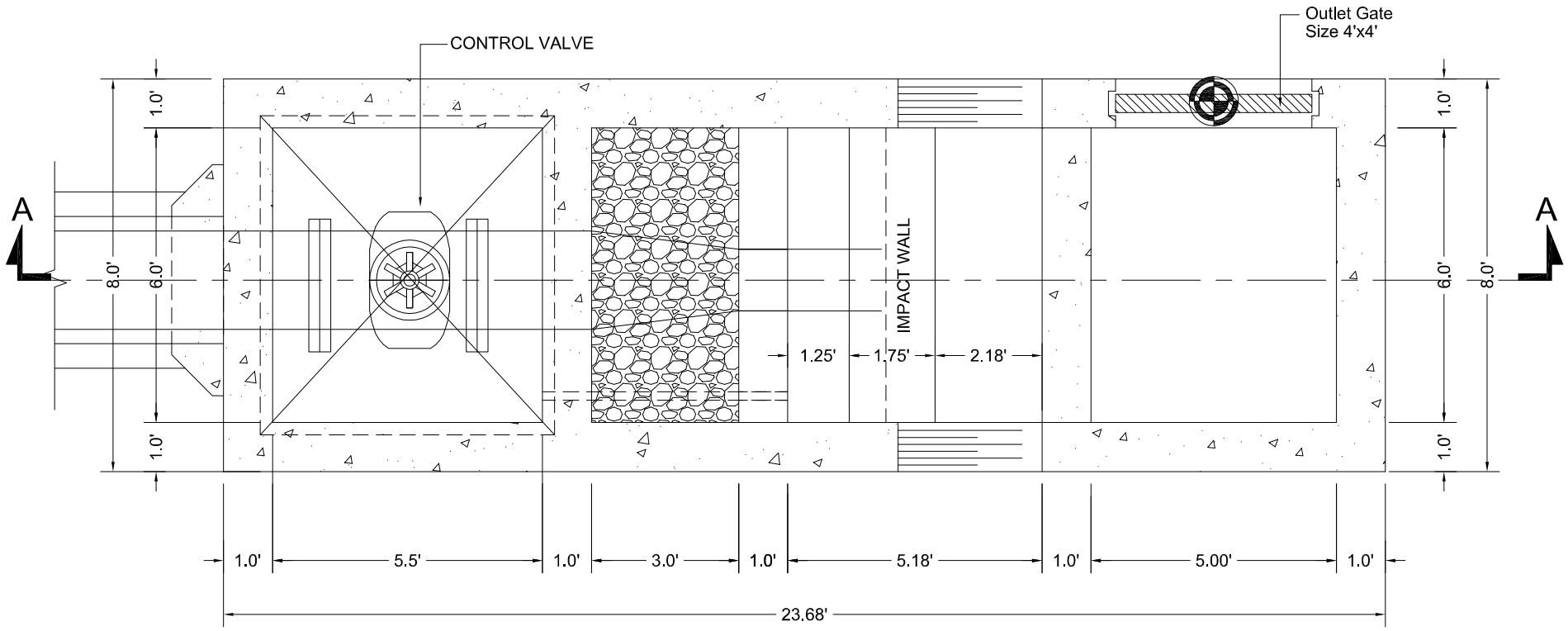

OUTLET STRUCTURE PLAN

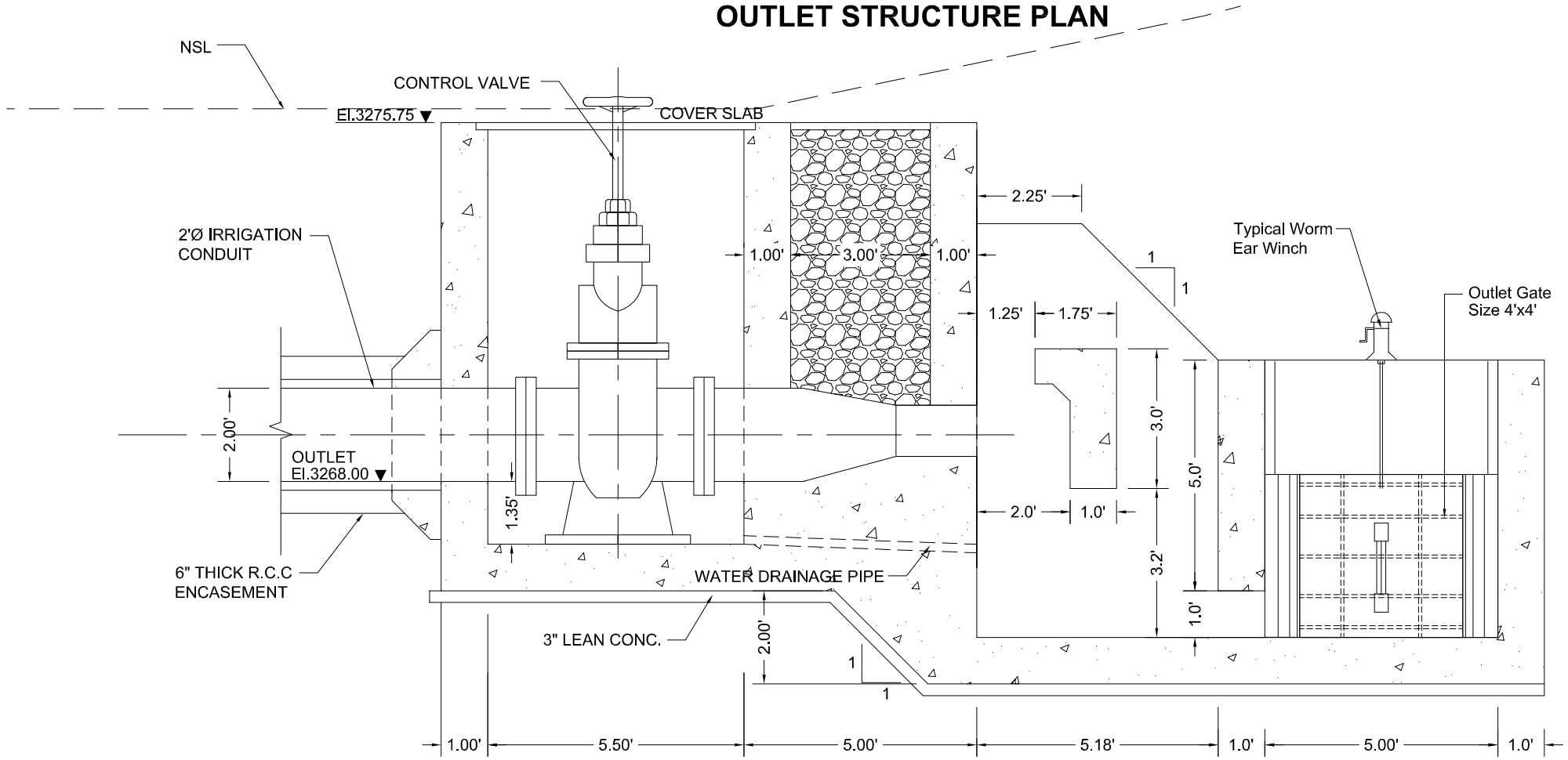

SECTION A-A

LEGEND

- Concrete (3000 Psi at 90 days)
- Concrete (3000 Psi at 28 days)
- Bed Rock

NOTES:-

1. **ALL DIMENSIONS ARE IN FEET**
2. **FOR LOCATION REF. DWG. NO. BQB-SDP-INT-01**

0 3 6 9 FEET

SCALE: 1"=3 Feet

SMALL DAMS ORGANIZATION GOVERNMENT OF KHYBER PAKHTUNKHWA	BARQAAB CONSULTING SERVICES (PVT)LIMITED LAHORE	SANAM DAM PROJECT LOWER DIR		DRAWN	IMTIAZ AHMED	**OUTLET STRUCTURE PLAN & SECTION**
				CHECKED	MANZAR MUMTAZ	
				SUBMITTED	MANZAR MUMTAZ	DATE: April, 2018 / DRAWING NO. **BQB-SDP-INT-04**
			REV. / DATE / DESCRIPTION	APPROVED	M.T.A	

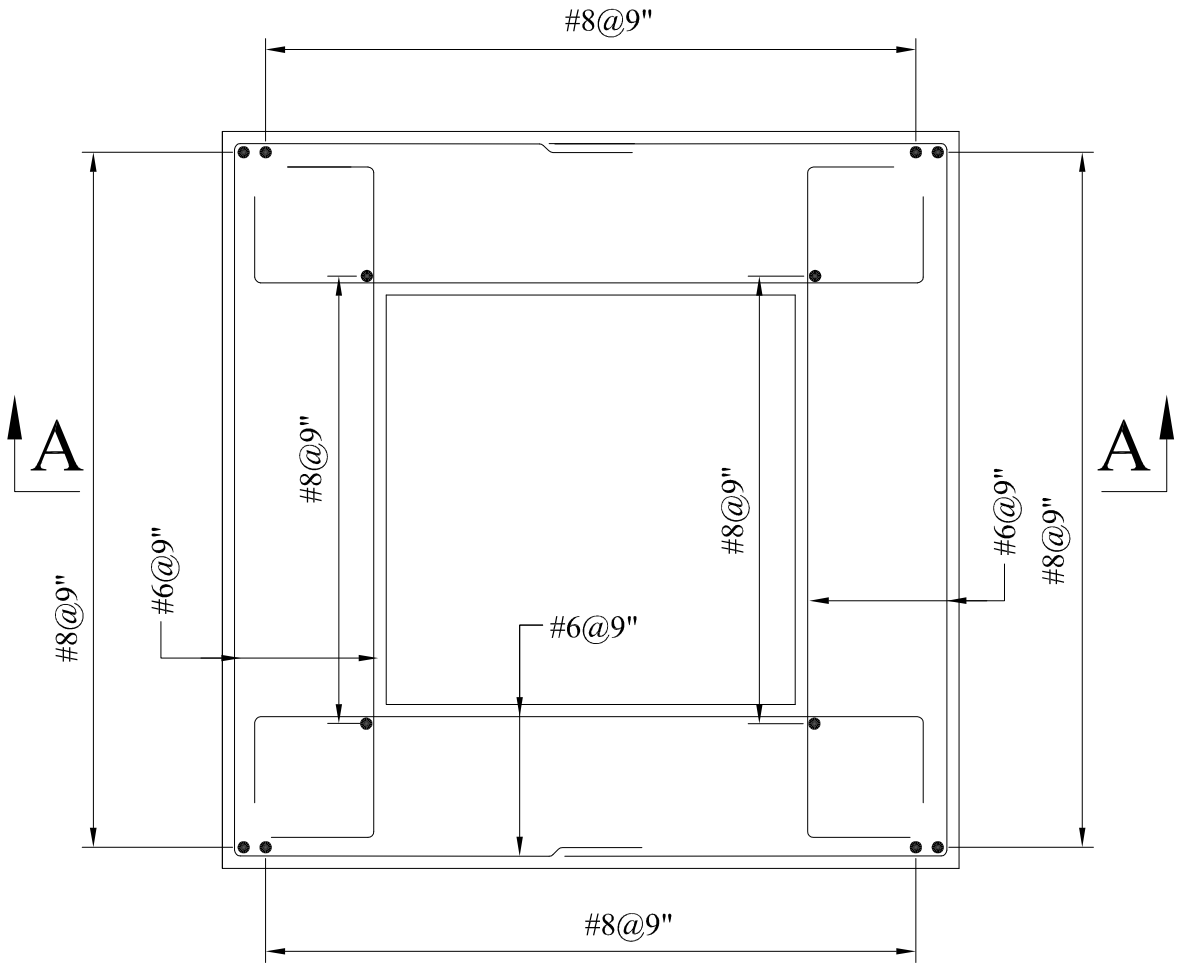

INTAKE STRUCTURE SECTIONAL PLAN

(REINFORCEMENT)

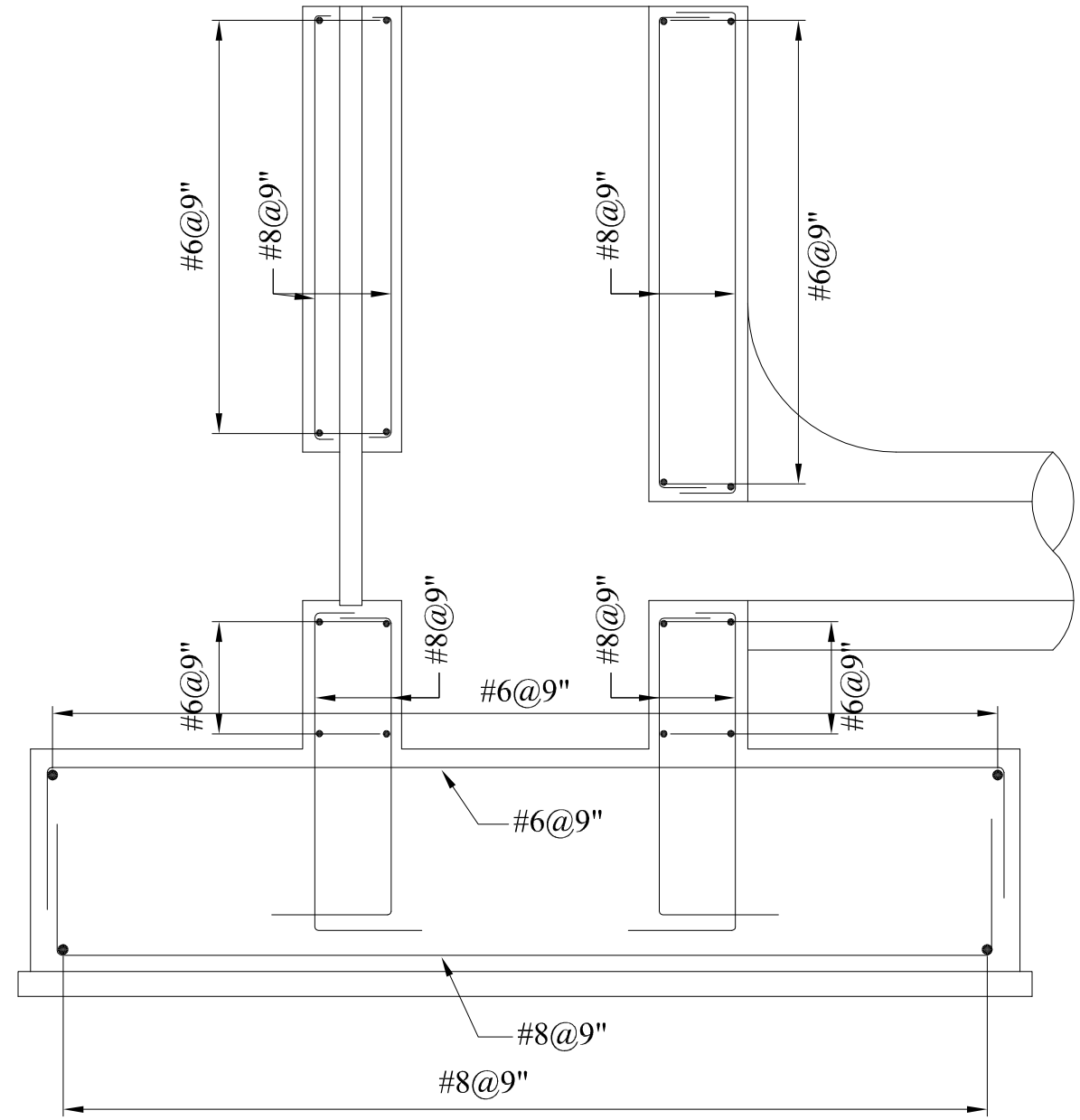

SECTION A-A

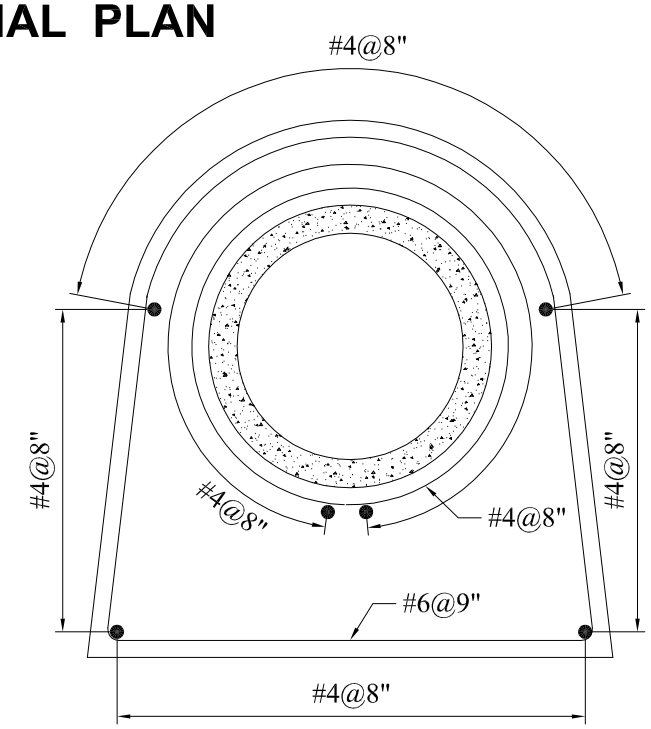

TYPICAL REINFORCEMENT
AROUND PIPE

NOTES:-

1. **ALL DIMENSIONS ARE IN FEET**
2. **FOR LOCATION REF. DWG. NO. BQB-SDP-INT-03**

SMALL DAMS ORGANIZATION GOVERNMENT OF KHYBER PAKHTUNKHWA	BARQAAB CONSULTING SERVICES (PVT)LIMITED LAHORE	SANAM DAM PROJECT LOWER DIR		DRAWN	IMTIAZ	**INTAKE STRUCTURE,CONDUIT REINFORCEMENT**
				CHECKED	TANVIR ABBAS	
				SUBMITTED	TANVIR ABBAS	DATE: May, 2018 / DRAWING NO. **BQB-SDP-INT-05**
			REV. / DATE / DESCRIPTION	APPROVED	M.T.A	

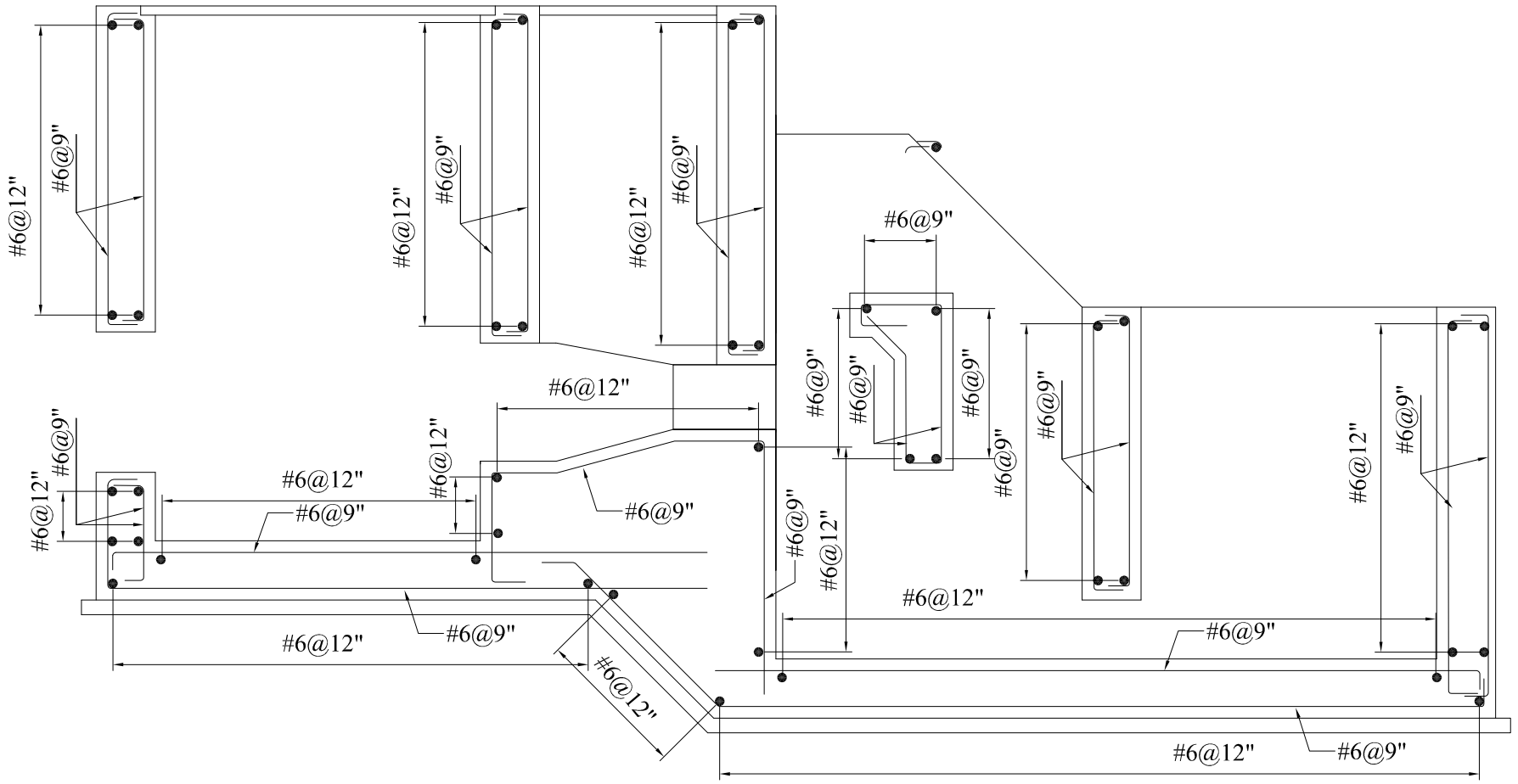

TYPICAL SECTION FOR OUTLET STRUCTURE
(REINFORCEMENT)

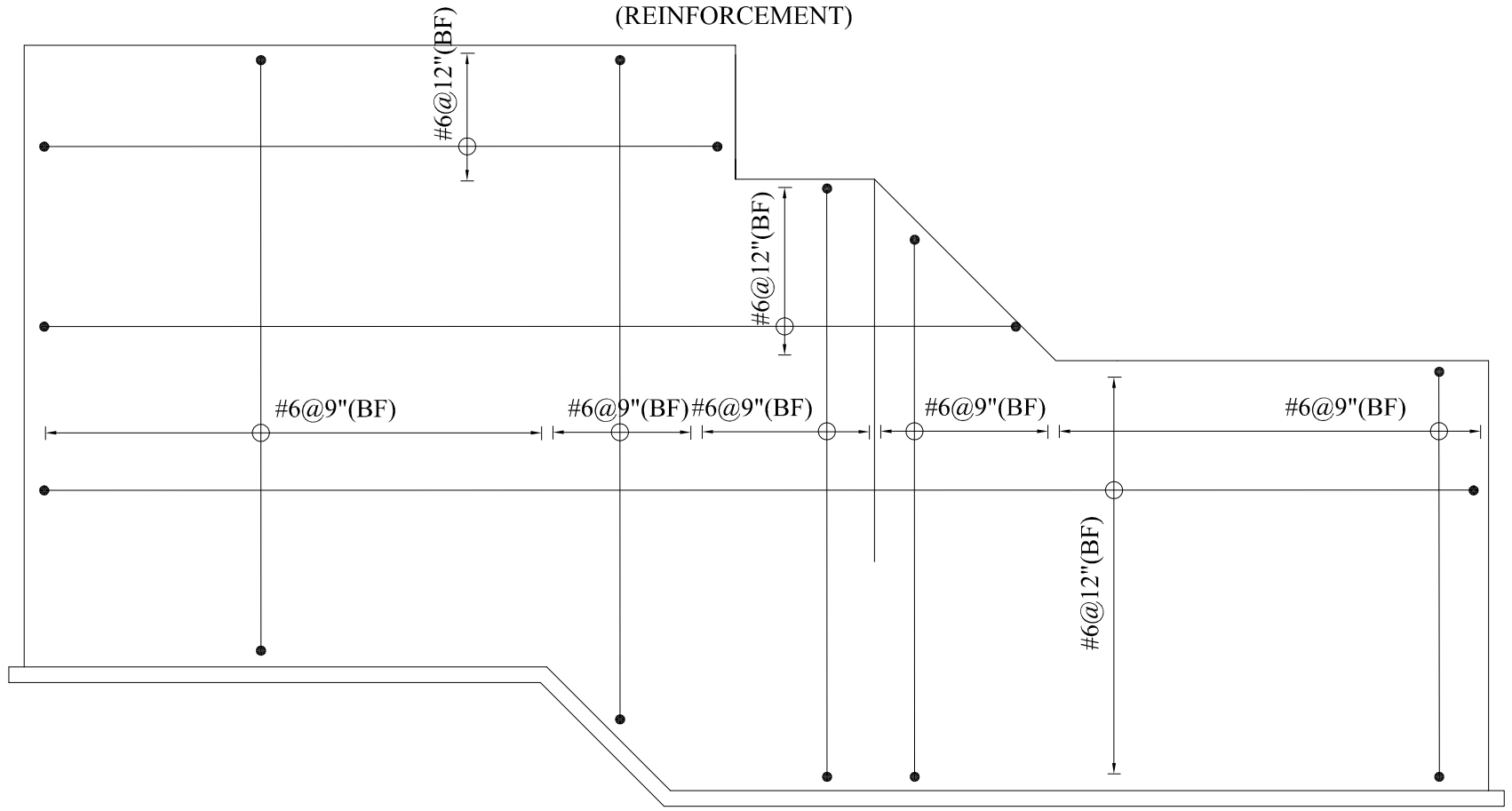

TYPICAL SIDE WALL ELEVATION FOR OUTLET STRUCTURE
(REINFORCEMENT)

NOTES:-

1. **ALL DIMENSIONS ARE IN FEET**
2. **FOR LOCATION REF. DWG. NO. BQB-SDP-INT-04**

SMALL DAMS ORGANIZATION GOVERNMENT OF KHYBER PAKHTUNKHWA	BARQAAB CONSULTING SERVICES (PVT)LIMITED LAHORE	SANAM DAM PROJECT LOWER DIR			DRAWN	IMTIAZ	**OUTLET STRUCTURE REINFORCEMENT**
					CHECKED	TANVIR ABBAS	
					SUBMITTED	TANVIR ABBAS	DATE: May, 2018 / DRAWING NO. **BQB-SDP-INT-06**
			REV.	DATE	APPROVED	M.T.A	
				DESCRIPTION			